50 Hz

SVI Series
2, 4, 8, 16, 33, 46, 66, 92

SUBMERSIBLE VERTICAL ELECTRIC PUMPS EQUIPPED WITH
IE2/IE3 MOTORS COMPLYING WITH REGULATION (EC) no. 640/2009

Cod. 191002451 Rev.B Ed.06/2012

LOWARA
a xylem brand

LOWARA
a xylem brand

SVI SERIES
HYDRAULIC PERFORMANCE RANGE AT 50 Hz

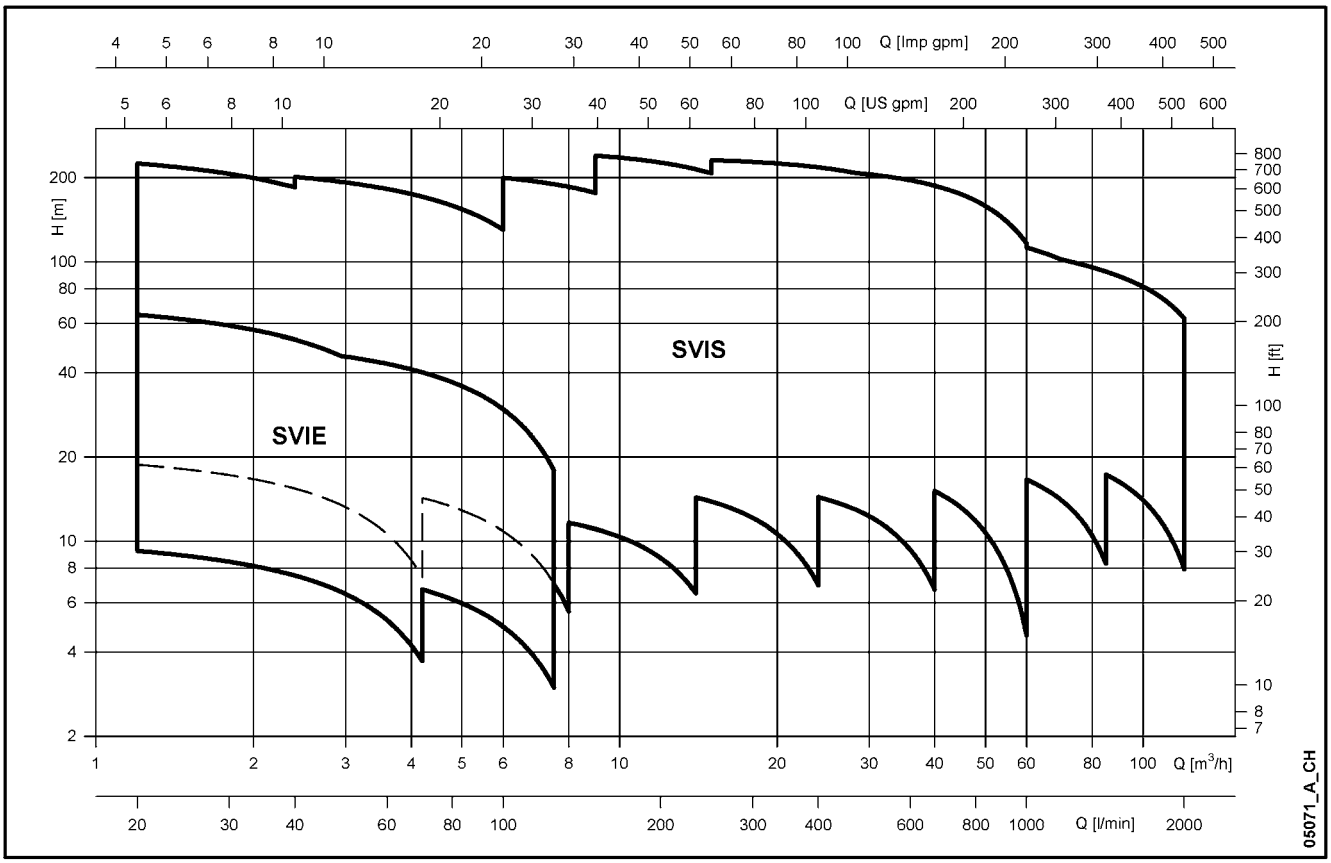

LOWARA
a xylem brand

CONTENTS

Specifications SVI Series 5

Characteristics of SVI 2, 4, 8, 16 Series 6

Characteristics of SVI 33, 46, 66, 92 Series 6

General Characteristics SVI Series 7

Identification Code SVI Series 8

SVI 2, 4 Series, Electric Pump Cross Section and Main Components 10

SVI 2, 4, 8, 16 Series, Electric Pump Cross Section and Main Components 11

SVI 33, 46, 66, 92 Series, Electric Pump Cross Section and Main Components 12

SVI Mechanical Seals 13

Motors 15

Hydraulic Performance Range SVI Series, 50 Hz 19

Table of Hydraulic Performances SVI Series, 50 Hz 20

Dimensions and Weights SVI Series 24

Operating Characteristics SVI Series, 50 Hz 25

Dimensions of flanges 44

Installation 45

Technical Appendix 47

LOWARA
a xylem brand

Submersible Vertical Electric pumps

SVI Series

MARKET SECTORS
INDUSTRIAL, CIVIL.

APPLICATIONS
- Pumping of coolants, lubrificants and condensate.
- Machine tools, welders, engine test stands.
- Cooling systems.
- Washing systems.
- Boosters.

SPECIFICATIONS
PUMP
SVI is a vertical-axis pump with submersible body, equipped with standard motor (for S and N versions).
- **Delivery**: up to 120 m^3/h.
- **Head**: up to 240 m.
- **Liquid temperature** for the standard versions:
  - from -10°C to +90°C for S and N versions with coupling.
  - from -10°C a +60°C for close-coupled E versions.
- Maximum ambient temperature: +40°C.
- **Mechanical seal** in Ceramic/ Carbon/FPM for the close-coupled E version and in Silicon Carbide/ Carbon/FPM for S and N versions with coupling.
  For SVI 33-46-66-92 models, mechanical seal can be replaced without removing the motor from the pump.
- Tank coupling flange in compliance with EN 12157 (ex DIN 5440) for SVI 2-4 models.
- Standard installation in vertical position; horizontal installation on request.
- These pumps can handle clean liquids free of abrasive substances or fibres, with kinematic viscosity up to 37mm^2/sec, with suitably sized motor.
- Minimum level of suction liquid: 25 mm for SVI 2-4-8-16 models and 80 mm for SVI 33-46-66-92.
- Base in the suction side with filter in order to avoid damages due to solids entrance.
- Tested in compliance with ISO 9906 Annex A.
- Direction of rotation: clockwise looking at the pump from the top down (marked with an arrow on the adapter and on the coupling).
- Longer pump columns (from coupling flange to suction base) are available on request. Possible variants are indicated in each model's dimensions table.

MOTORS
- 2 poles motors with squirrel cage in short circuit, enclosed construction with external ventilation.
- Construction design:
  - Close-coupled for E version.
  - Standard motor for S and N versions.
- **Standard supplied IE2/IE3 motors are compliant with Regulation (EC) no. 640/2009 and IEC 60034-30**.
- IP55 **protection**.
- Class 155 (F) **Insulation**.
- Performances according to EN 60034-1.
- Standard voltage:
  - Three-phase version: 220-240/380-415 V, 50 Hz for power up to 3 kW, 380-415/660-690 V, 50 Hz for power above 3 kW.

CHARACTERISTICS OF SVI 2, 4 SERIES (E, EN VERSIONS)

- Vertical pump with submersible body with impellers, diffusers, outer sleeve, suction base and filter made entirely of stainless steel.
  Adapter with delivery port in cast iron.
- "N" version made entirely of AISI 316 stainless steel.
- Motor with special shaft extension.
- Standard version for temperatures ranging from -10°C to +60°C.

CHARACTERISTICS OF SVI 2, 4, 8, 16 SERIES (S, N VERSIONS)

- Vertical pump with submersible body.
- "S" version with standard motor; impellers, diffusers, outer sleeve, suction base and filter made entirely of stainless steel. Adapter with delivery port in cast iron.
- "N" version with standard motor, made entirely of AISI 316 stainless steel.
- Reduced axial thrusts enable the use of standard motors that are easily found in the market.
- Mechanical seal according to EN 12756 (ex DIN 24960) e ISO 3069.
- Standard version for temperatures ranging from -10°C to +90°C.

CHARACTERISTICS OF SVI 33, 46, 66, 92 SERIES (S, N VERSIONS)

- Vertical pump with submersible body.
- "S" version with standard motor; impellers, diffusers, tie-rods, suction base and filter made entirely of stainless steel. Adapter and upper head in cast iron.
- "N" version with standard motor; made entirely of AISI 316 stainless steel.
- Delivery port can be coupled to counter-flanges, according to EN 1092.
- Four new sizes (SVI 33-46-66-92) entirely re-designed; improved efficiency and performances.
- Motor versions, depending on the model:
  - with standard bearings for powers up to 11 kW.
  - with reinforced bearings, able to support the vertical axial thrust of the pump for powers ≥ 15 kW (SVI3306/2, SVI4604/2, SVI9202 excluded, with standard bearings).
- Balanced mechanical seal (SiC/C/FPM as standard) according to EN 12756 (ex DIN 24960) and ISO 3069, which can be replaced without removing the motor from the pump.
- Standard version for temperatures ranging from -10°C e +90°C.

OPTIONAL FEATURES

- Single-phase version.
- 4 poles version.
- Special voltages.
- 60 Hz frequency.
- Special materials for mechanical seals and gaskets.
- Horizontal installation.

ACCESSORIES

- Adapter ring which allows compatibility with the previous models SVI 30-60 (keeping the same discharge port axle height from the flange and the same centering to the tank).

GENERAL CHARACTERISTICS
2-POLE SVI

	2E	4E	2S	4S	8S	16S	33S	46S	66S	92S
Max efficiency flow (m³/h)	3	5,5	3	5,5	10,5	16	33	42	74	92
Flow range (m³/h)	1,2÷4,2	2,4÷7,2	1,2÷4,2	2,4÷7,2	6÷14	9÷24	15÷40	22÷60	30÷85	45÷120
Maximum pressure (bar)	8	6	26	23	22	25	24	22	15	13
Motor power (kW)	0,37÷0,9	0,37÷0,9	0,37÷3	0,37÷4	0,75÷7,5	1,1÷15	2,2÷30	3÷30	4÷30	5,5÷30
Max η (%) of pump	42	57	42	59,5	61,5	64,5	76,5	79	78	79,5
Standard temperature (°C)	-10 +60		-10 +90							

svi-2p50-en_a_tg

SVI VERSIONS

	VERSION	HYDRAULIC	UPPER HEAD	DELIVERY PORT
SVI2-4E	CLOSE-COUPLED	AISI 304	CAST IRON	Threaded Rp 3/4
SVI2-4EN	CLOSE-COUPLED	AISI 316	AISI 316	Threaded Rp 3/4
SVI2-4S	WITH COUPLING	AISI 304	CAST IRON	Threaded Rp 1 1/4
SVI2-4N	WITH COUPLING	AISI 316	AISI 316	Threaded Rp 1 1/4
SVI8-16S	WITH COUPLING	AISI 304	CAST IRON	Threaded Rp 2
SVI8-16N	WITH COUPLING	AISI 316	AISI 316	Threaded Rp 2
SVI33-46-66-92S	WITH COUPLING	AISI 304	CAST IRON	Flanged DN 80
SVI33-46-66-92N	WITH COUPLING	AISI 316	AISI 316	Flanged DN 80

svi-vers-2p50-en_a_tc

VERSION DIAGRAM

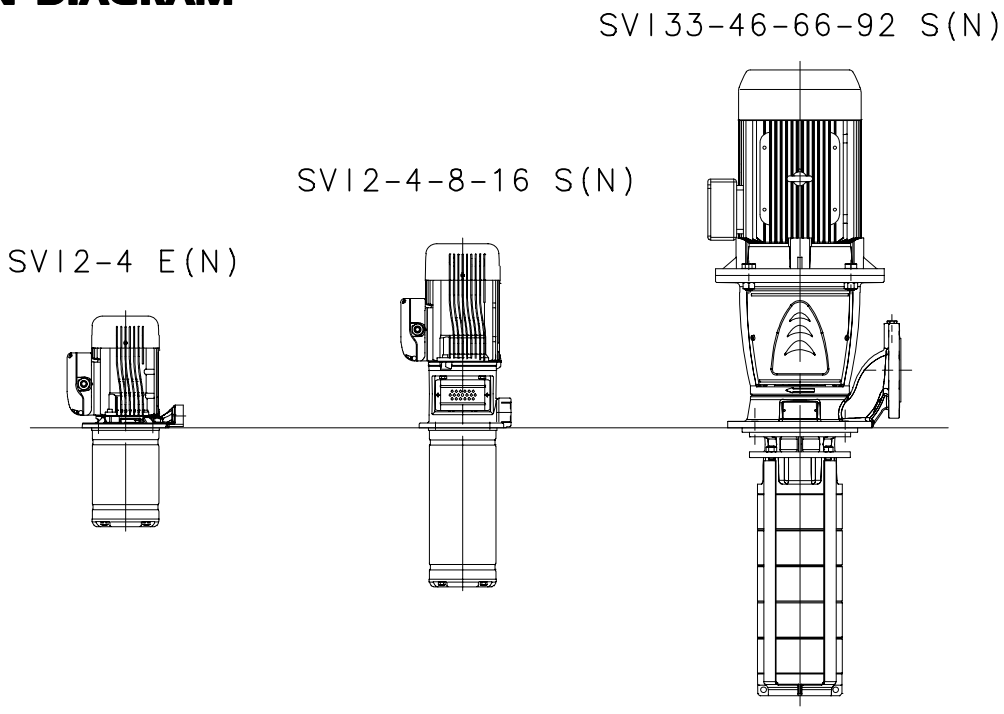

05003_A_SC

IDENTIFICATION CODE

SVI 2, 4, 8, 16

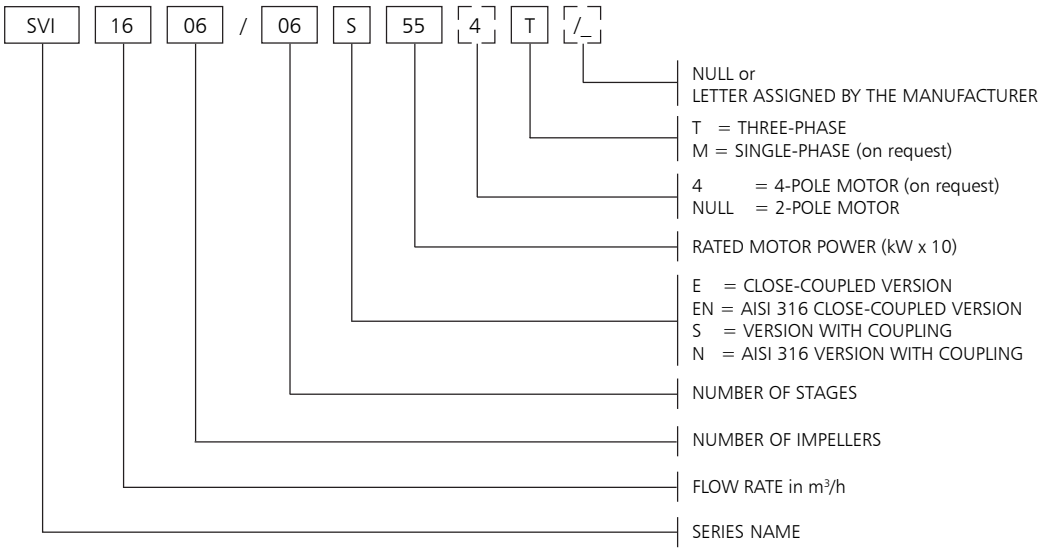

EXAMPLE : SVI1606/06S55T
SVI Series Electric pump, flow rate 16 m³/h, number of impellers 6, number of stages 6,
S version with coupling, rated motor power 5,5 kW, 50 Hz version, three-phase.

SVI 33, 46, 66, 92

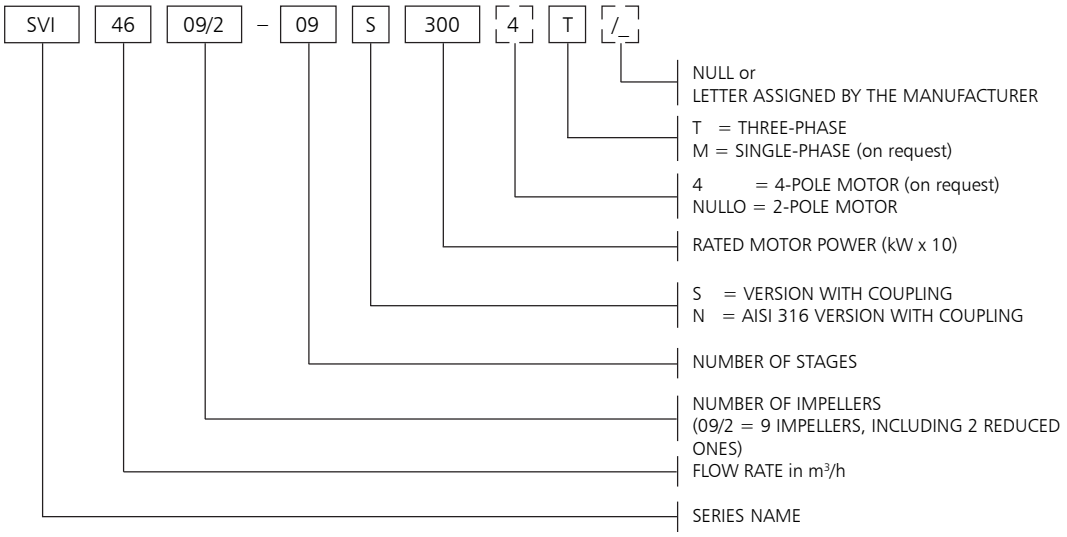

EXAMPLE : SVI4609/2-09S300T
SVI Series Electric pump, flow rate 46 m³/h, number of impellers 9 including 2 reduced ones,
number of stages 9, S version with coupling, rated motor power 30 kW, 50 Hz version, three-phase.

RATING PLATE
SVI 2, 4 (E, EN)

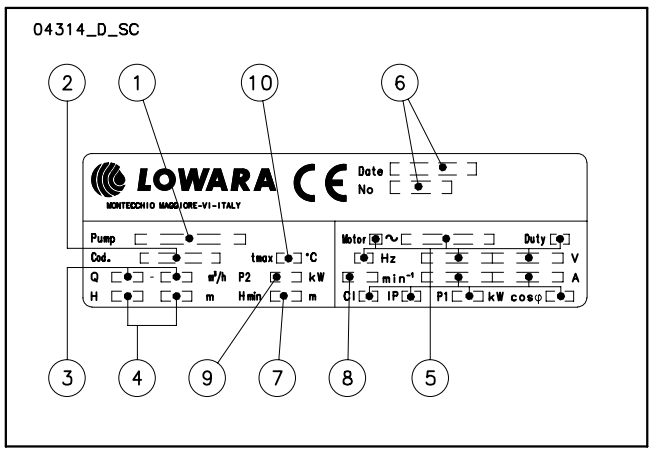

LEGEND

1 - Electric pump type
2 - Code
3 - Delivery range
4 - Head range
5 - Motor type
6 - Date of manufacturing and serial number
7 - Minimum head
8 - Speed
9 - Rated power
10 - Maximum operating temperature

SVI 2, 4, 8, 16 (S, N)

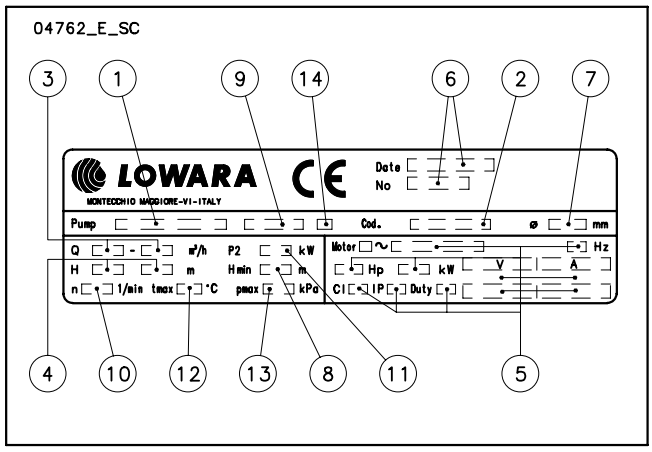

LEGEND

1 - Electric pump type
2 - Code
3 - Delivery range
4 - Head range
5 - Motor type
6 - Date of manufacturing and serial number
7 - Impeller diameter
8 - Minimum head
9 - Mechanical seal material identification code
10 - Speed
11 - Rated power
12 - Maximum operating temperature
13 - Maximum operating pressure
14 - O-ring material identification code

SVI 33, 46, 66, 92 (S, N)

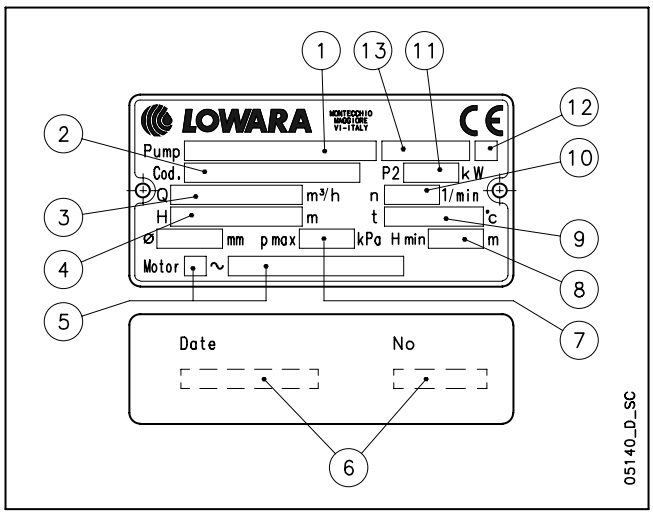

LEGEND

1 - Electrip pump type
2 - Code
3 - Delivery range
4 - Head range
5 - Motor type
6 - Date of manufacturing and serial number
7 - Maximum operating pressure *
8 - Minimum head
9 - Maximum operating temperature *
10 - Speed
11 - Rated power
12 - O-ring material identification code
13 - Mechanical seal material identification code

* To be verified on pressure/temperature limit diagrams (pag. 14)

SVI 2, 4 (E, EN) SERIES
ELECTRIC PUMP CROSS SECTION AND MAIN COMPONENTS

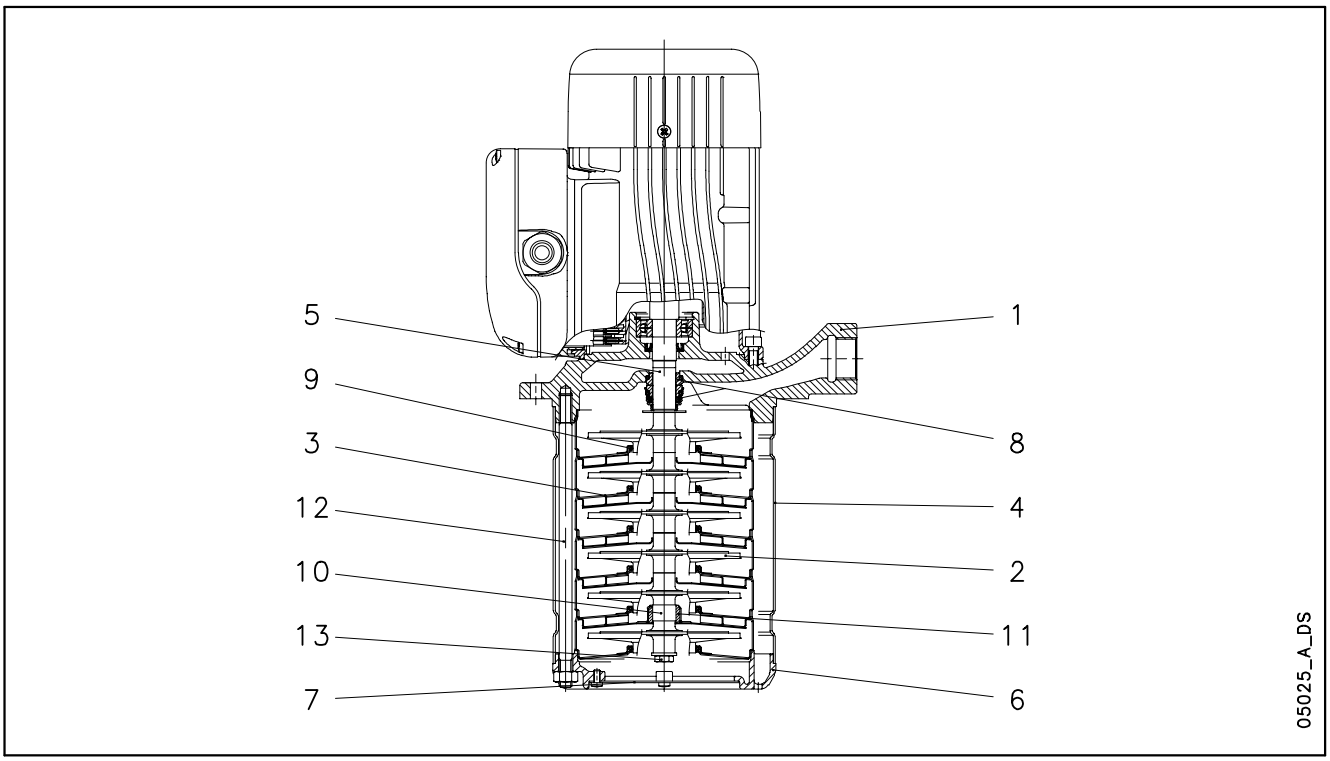

SVI 2, 4 (E VERSIONS)

REF. N.	NAME	MATERIAL	REFERENCE STANDARDS	
			EUROPE	USA
1	Adapter	Cast iron	EN 1561-GJL-200 (JL1030)	ASTM Class 25
2	Impeller	Stainless steel	EN 10088-1-X5CrNi18-10 (1.4301)	AISI 304
3	Diffuser	Stainless steel	EN 10088-1-X5CrNi18-10 (1.4301)	AISI 304
4	Outer sleeve	Stainless steel	EN 10088-1-X2CrNiMo17-12-2 (1.4404)	AISI 316L
5	Shaft	Stainless steel	EN 10088-1-X5CrNi18-10 (1.4301)	AISI 304
6	Suction base	Stainless steel	EN 10213-4-GX5CrNiMo19-11-2 (1.4408)	ASTM CF8M (AISI 316 cast)
7	Strainer	Stainless steel	EN 10088-1-X5CrNiMo17-12-2 (1.4401)	AISI 316
8	Mechanical seal	Ceramic / Carbon / FPM		
9	Elastomers	FPM		
10	Shaft sleeve	Tungsten carbide		
11	Bushing	Ceramic (Alumina)		
12	Tie rods	Stainless steel	EN 10088-1-X5CrNiMo17-12-2 (1.4401)	AISI 316
13	Screws	Stainless steel	EN 10088-1-X5CrNi18-10 (1.4301)	AISI 304

svi2-4-e-en_a_tm

SVI 2, 4 (EN VERSIONS)

REF. N.	NAME	MATERIAL	REFERENCE STANDARDS	
			EUROPE	USA
1	Adapter	Stainless steel	EN 10213-4-GX5CrNiMo19-11-2 (1.4408)	ASTM CF8M (AISI 316 cast)
2	Impeller	Stainless steel	EN 10088-1-X2CrNiMo17-12-2 (1.4404)	AISI 316L
3	Diffuser	Stainless steel	EN 10088-1-X2CrNiMo17-12-2 (1.4404)	AISI 316L
4	Outer sleeve	Stainless steel	EN 10088-1-X2CrNiMo17-12-2 (1.4404)	AISI 316L
5	Shaft	Stainless steel	EN 10088-1-X5CrNiMo17-12-2 (1.4401)	AISI 316
6	Suction base	Stainless steel	EN 10213-4-GX5CrNiMo19-11-2 (1.4408)	ASTM CF8M (AISI 316 cast)
7	Strainer	Stainless steel	EN 10088-1-X5CrNiMo17-12-2 (1.4401)	AISI 316
8	Mechanical seal	Ceramic / Carbon / FPM		
9	Elastomers	FPM		
10	Shaft sleeve	Tungsten carbide		
11	Bushing	Ceramic (Alumina)		
12	Tie rods	Acciaio inox	EN 10088-1-X5CrNiMo17-12-2 (1.4401)	AISI 316
13	Screws	Acciaio inox	EN 10088-1-X5CrNiMo17-12-2 (1.4401)	AISI 316

svi2-4-n-en_a_tm

SVI 2, 4, 8, 16 (S, N) SERIES
ELECTRIC PUMP CROSS SECTION AND MAIN COMPONENTS

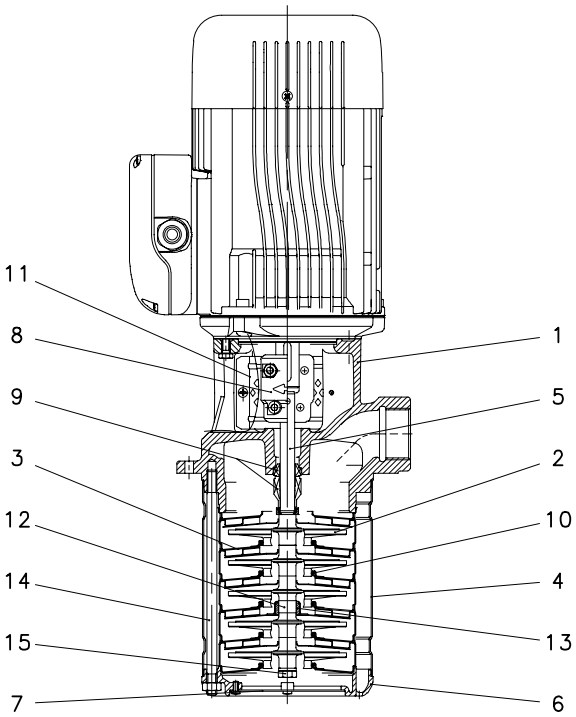

SVI 2, 4, 8, 16 (S VERSIONS)

REF. N.	NAME	MATERIAL	REFERENCE STANDARDS	
			EUROPE	USA
1	Adapter	Cast iron	EN 1561-GJL-250 (JL1040)	ASTM Class 35
2	Impeller	Stainless steel	EN 10088-1-X5CrNi18-10 (1.4301)	AISI 304
3	Diffuser	Stainless steel	EN 10088-1-X5CrNi18-10 (1.4301)	AISI 304
4	Outer sleeve	Stainless steel	EN 10088-1-X2CrNiMo17-12-2 (1.4404)	AISI 316L
5	Shaft	Stainless steel	EN 10088-1-X5CrNi18-10 (1.4301)	AISI 304
6	Suction base	Stainless steel	EN 10213-4-GX5CrNiMo19-11-2 (1.4408)	ASTM CF8M (AISI 316 cast)
7	Strainer	Stainless steel	EN 10088-1-X5CrNiMo17-12-2 (1.4401)	AISI 316
8	Coupling (up to 4 kW)	Aluminium	EN 1706-AC-AlSi11Cu2 (Fe) (AC46100)	-
	Coupling (for higher powers)	Cast iron	EN 1561-GJL-200 (JL1030)	ASTM Class 25
9	Mechanical seal	Silicon carbide / Carbon / FPM		
10	Elastomers	FPM		
11	Coupling protection	Stainless steel	EN 10088-1-X5CrNi18-10 (1.4301)	AISI 304
12	Shaft sleeve	Tungsten carbide		
13	Bushing	Ceramic (Alumina)		
14	Tie rods	Stainless steel	EN 10088-1-X5CrNiMo17-12-2 (1.4401)	AISI 316
15	Screws	Stainless steel	EN 10088-1-X5CrNiMo17-12-2 (1.4401)	AISI 316

svi2-16-s-en_a_tm

SVI 2, 4, 8, 16 (N VERSIONS)

REF. N.	NAME	MATERIAL	REFERENCE STANDARDS	
			EUROPE	USA
1	Adapter	Stainless steel	EN 10213-4-GX5CrNiMo19-11-2 (1.4408)	ASTM CF8M (AISI 316 cast)
2	Impeller	Stainless steel	EN 10088-1-X2CrNiMo17-12-2 (1.4404)	AISI 316L
3	Diffuser	Stainless steel	EN 10088-1-X2CrNiMo17-12-2 (1.4404)	AISI 316L
4	Outer sleeve	Stainless steel	EN 10088-1-X2CrNiMo17-12-2 (1.4404)	AISI 316L
5	Shaft	Stainless steel	EN 10088-1-X5CrNiMo17-12-2 (1.4401)	AISI 316
6	Suction base	Stainless steel	EN 10213-4-GX5CrNiMo19-11-2 (1.4408)	ASTM CF8M (AISI 316 cast)
7	Strainer	Stainless steel	EN 10088-1-X5CrNiMo17-12-2 (1.4401)	AISI 316
8	Coupling (up to 4 kW)	Aluminium	EN 1706-AC-AlSi11Cu2 (Fe) (AC46100)	-
	Coupling (for higher powers)	Cast iron	EN 1561-GJL-200 (JL1030)	ASTM Class 25
9	Mechanical seal	Silicon carbide / Carbon / FPM		
10	Elastomers	FPM		
11	Coupling protection	Stainless steel	EN 10088-1-X5CrNi18-10 (1.4301)	AISI 304
12	Shaft sleeve	Tungsten carbide		
13	Bushing	Ceramic (Alumina)		
14	Tie rods	Stainless steel	EN 10088-1-X5CrNiMo17-12-2 (1.4401)	AISI 316
15	Screws	Stainless steel	EN 10088-1-X5CrNiMo17-12-2 (1.4401)	AISI 316

svi2-16-n-en_a_tm

LOWARA
a xylem brand

SVI 33, 46, 66, 92 (S, N) SERIES
ELECTRIC PUMP CROSS SECTION AND MAIN COMPONENTS

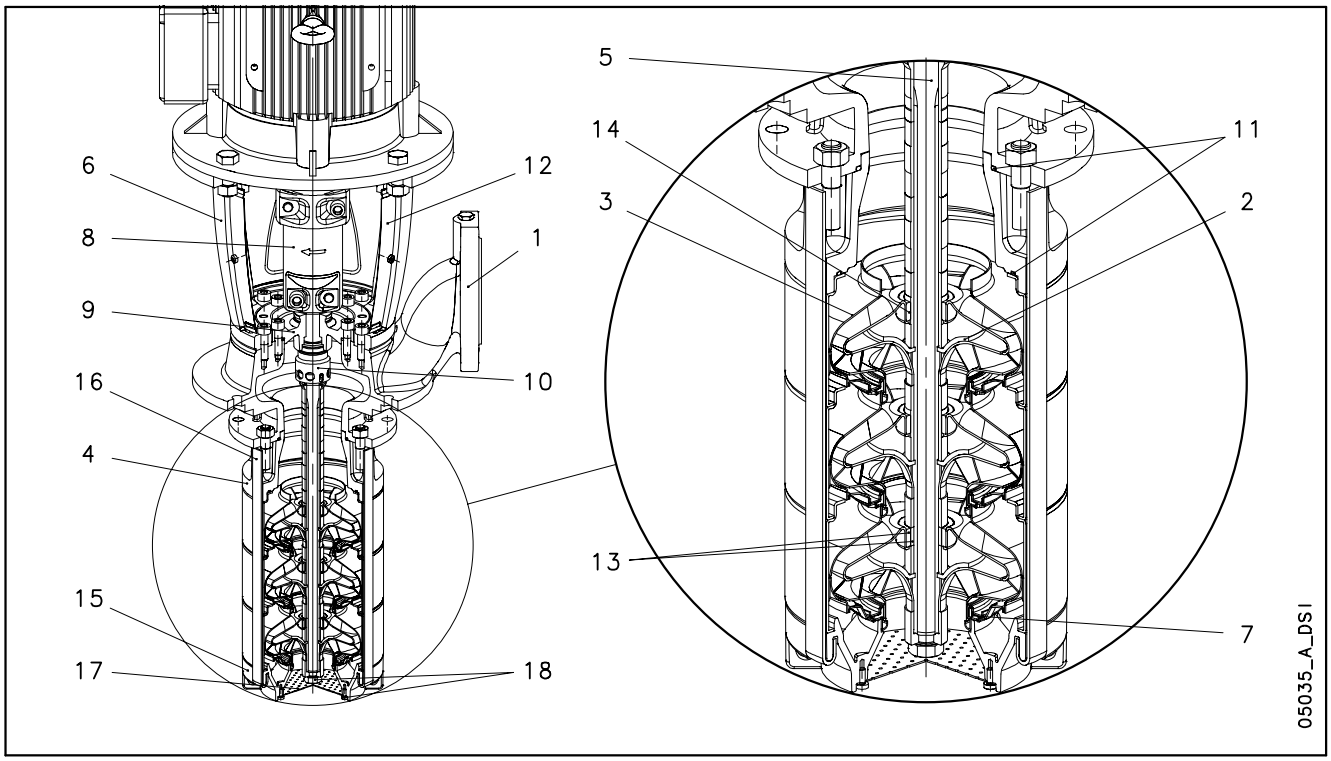

SVI 33, 46, 66, 92 (S VERSIONS)

REF. N.	NAME	MATERIAL	REFERENCE STANDARDS	
			EUROPE	USA
1	Upper head	Cast iron	EN 1561-GJL-250 (JL1040)	ASTM Class 35
2	Impeller	Stainless steel	EN 10088-1-X2CrNiMo17-12-2 (1.4404)	AISI 316L
3	Diffuser	Stainless steel	EN 10088-1-X5CrNi18-10 (1.4301)	AISI 304
4	Adapter	Cast iron	EN 1561-GJL-250 (JL1040)	ASTM Class 35
5	Shaft	Stainless steel	EN 10088-1 - X17CrNi16-2 (1.4057)	AISI 431
6	Motor adapter	Cast iron	EN 1561-GJL-200 (JL1030)	ASTM Class 25
7	Wear ring	Technopolymer PPS		
8	Coupling	Cast iron	EN 1561-GJL-200 (JL1030)	ASTM Class 25
9	Seal housing	Cast iron	EN 1561-GJL-250 (JL1040)	ASTM Class 35
10	Mechanical seal	Silicon carbide / Carbon / FPM		
11	Elastomers	FPM		
12	Coupling protection	Stainless steel	EN 10088-1-X5CrNi18-10 (1.4301)	AISI 304
13	Shaft sleeve and bushing	Tungsten carbide		
14	Bushing for diffuser	Carbon		
15	Suction base	Stainless steel	EN 10213-4-GX5CrNiMo19-11-2 (1.4408)	ASTM CF8M (AISI 316 cast)
16	Tie rods	Stainless steel	EN 10088-1-X5CrNi18-10 (1.4301)	AISI 304
17	Strainer	Stainless steel	EN 10088-1-X5CrNiMo17-12-2 (1.4401)	AISI 316
18	Screws	Stainless steel	EN 10088-1-X5CrNiMo17-12-2 (1.4401)	AISI 316

svi33-92-s-en_a_tm

SVI 33, 46, 66, 92 (N VERSIONS)

REF. N.	NAME	MATERIAL	REFERENCE STANDARDS	
			EUROPE	USA
1	Upper head	Stainless steel	EN 10213-4-GX5CrNiMo19-11-2 (1.4408)	ASTM CF8M (AISI 316 cast)
2	Impeller	Stainless steel	EN 10088-1-X2CrNiMo17-12-2 (1.4404)	AISI 316L
3	Diffuser	Stainless steel	EN 10088-1-X2CrNiMo17-12-2 (1.4404)	AISI 316L
4	Adapter	Stainless steel	EN 10213-4-GX5CrNiMo19-11-2 (1.4408)	ASTM CF8M (AISI 316 cast)
5	Shaft	Duplex stainless steel	EN 10088-1-X2CrNiMoN22-5-3 (1.4462)	UNS S 31803
6	Motor adapter	Cast iron	EN 1561-GJL-200 (JL1030)	ASTM Class 25
7	Wear ring	Technopolymer PPS		
8	Coupling	Cast iron	EN 1561-GJL-200 (JL1030)	ASTM Class 25
9	Seal housing	Stainless steel	EN 10213-4-GX5CrNiMo19-11-2 (1.4408)	ASTM CF8M (AISI 316 cast)
10	Mechanical seal	Silicon carbide / Carbon / FPM		
11	Elastomers	FPM		
12	Coupling protection	Stainless steel	EN 10088-1-X5CrNi18-10 (1.4301)	AISI 304
13	Shaft sleeve and bushing	Tungsten carbide		
14	Bushing for diffuser	Carbon		
15	Suction base	Stainless steel	EN 10213-4-GX5CrNiMo19-11-2 (1.4408)	ASTM CF8M (AISI 316 cast)
16	Tie rods	Stainless steel	EN 10088-1-X2CrNiMo17-12-2 (1.4404)	AISI 316L
17	Strainer	Stainless steel	EN 10088-1-X5CrNiMo17-12-2 (1.4401)	AISI 316
18	Screws	Stainless steel	EN 10088-1-X5CrNiMo17-12-2 (1.4401)	AISI 316

svi33-92-n-en_a_tm

SVI (E, EN) SERIES
MECHANICAL SEAL, ACCORDING TO EN 12756

SVI 2, 4

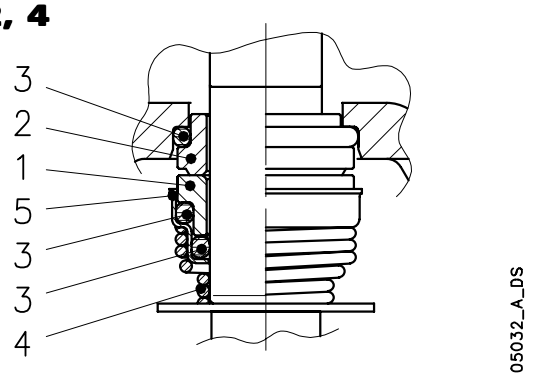

LIST OF MATERIALS

POSITION 1 - 2	POSITION 3	POSITION 4 - 5
V : Ceramic	V : FPM	G : AISI 316
B : Resin impregnated carbon	E : EPDM	
C : Special resin impregnated carbon		
Q_1 : Silicon Carbide		

svi-e_ten-mec-en_a_tm

SEAL TYPES

TYPE	POSITION					TEMPERATURE (°C)
	1	2	3	4	5	
	ROTATING PART	STATIONARY PART	ELASTOMERS	SPRINGS	OTHER COMPONENTS	
STANDARD MECHANICAL SEAL						
V B V G G	V	B	V	G	G	-10 +60
OTHER TYPES OF MECHANICAL SEAL						
Q_1 Q_1 E G G	Q_1	Q_1	E	G	G	-30 +60
Q_1 C V G G	Q_1	C	V	G	G	-10 +60
Q_1 Q_1 V G G	Q_1	Q_1	V	G	G	-10 +60

svi-e_tipi-ten-mec-en_a_tc

COMPLETE PUMP PRESSURE / TEMPERATURE OPERATING LIMITS (WITH ANY OF THE SEALS LISTED ABOVE)

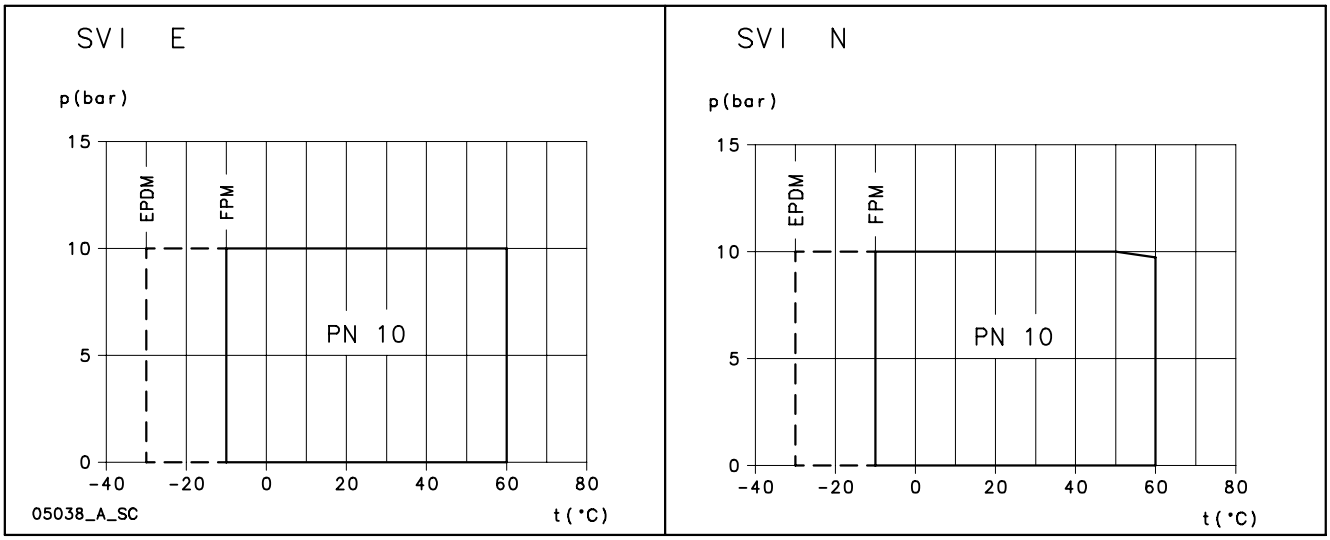

SVI (S, N) SERIES
MECHANICAL SEALS, ACCORDING TO EN 12756

SVI 2, 4, 8, 16

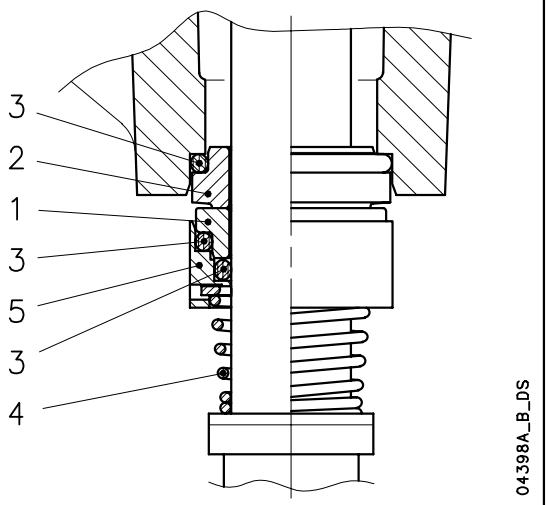

SVI 33, 46, 66, 92

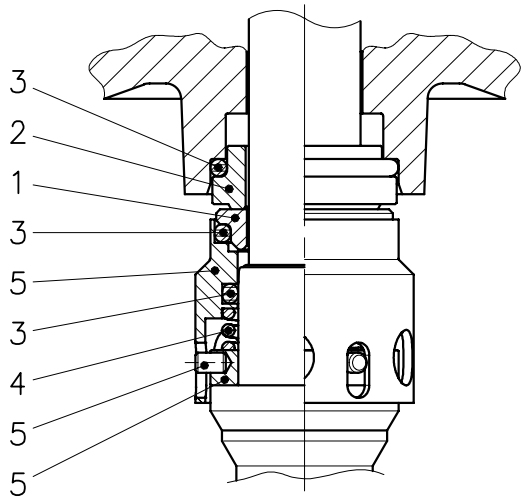

LIST OF MATERIALS

POSITION 1 - 2	POSITION 3	POSITION 4 - 5
Q_1 : Silicon Carbide	V : FPM	G : AISI 316
B : Resin impregnated carbon	E : EPDM	
	T : PTFE	

SEAL TYPES

svi-s_ten-mec-en_a_tm

TYPE	POSITION 1 ROTATING PART	POSITION 2 STATIONARY PART	POSITION 3 ELASTOMERS	POSITION 4 SPRINGS	POSITION 5 OTHER COMPONENTS	TEMPERATURE (°C)
STANDARD MECHANICAL SEAL						
Q_1 B V G G	Q_1	B	V	G	G	-10 +90
OTHER TYPES OF MECHANICAL SEAL						
Q_1 Q_1 V G G	Q_1	Q_1	V	G	G	-10 +90
Q_1 Q_1 E G G	Q_1	Q_1	E	G	G	-30 +90
Q_1 Q_1 T G G	Q_1	Q_1	T	G	G	0 +90

svi-s_tipi-ten-mec-en_a_tc

COMPLETE PUMP PRESSURE / TEMPERATURE OPERATING LIMITS (WITH ANY OF THE SEALS LISTED ABOVE)

SVI S

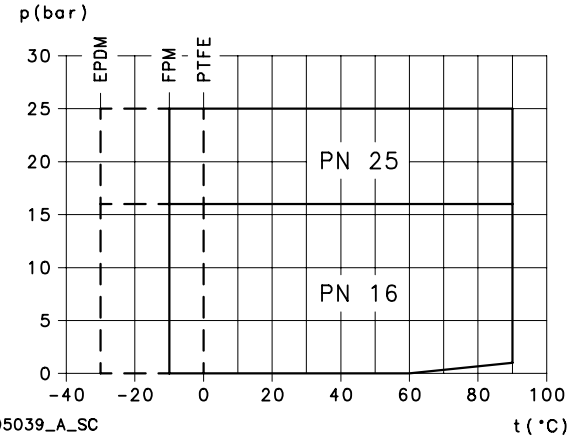

SVI N

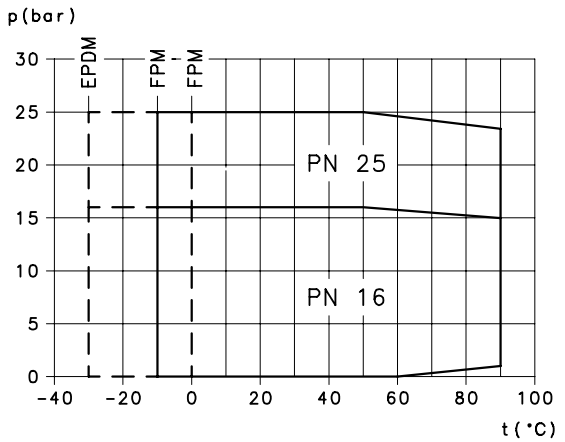

LOWARA
a xylem brand

MOTORS FOR SVI SERIES

- **Standard supplied IE2/IE3 three-phase surface motors ≥ 0,75 kW are compliant with Regulation (EC) no. 640/2009 and IEC 60034-30**.
- Short-circuit squirrel-cage motor (TEFC), enclosed construction with external ventilation.
- IP55 protection.
- Class 155 (F) insulation.
- Performance according to EN 60034-1.
- Standard voltage.
- Cable gland with standard passage dimensions according to EN 50262 (metric thread).

- **Single-phase** version: 220-240 V 50 Hz (on request).
- **Three-phase** version 220-240/380-415 V 50 Hz for power up to 3 kW.
  380-415/660-690 V 50 Hz for power above 3 kW.
  Overload protection to be provided by the user.

SVI (E, EN) SERIES
THREE-PHASE MOTORS AT 50 Hz, 2 POLES

	Efficiency η_N %																			Year of manufacture
	Δ 220 V Y 380 V			Δ 230 V Y 400 V			Δ 240 V Y 415 V			Δ 380 V Y 660 V			Δ 400 V Y 690 V			Δ 415 V			IE	
P_N kW	4/4	3/4	2/4	4/4	3/4	2/4	4/4	3/4	2/4	4/4	3/4	2/4	4/4	3/4	2/4	4/4	3/4	2/4		
0,3	-	-	-	-	-	-	-	-	-	-	-	-	-	-	-	-	-	-	-	By June 2011
0,45	-	-	-	-	-	-	-	-	-	-	-	-	-	-	-	-	-	-	-	
0,55	-	-	-	-	-	-	-	-	-	-	-	-	-	-	-	-	-	-	-	
0,75	82,5	83,1	81,3	82,8	82,7	80,1	82,6	82,0	78,9	82,5	82,0	78,9	82,5	82,0	78,9	82,5	82,0	78,9	3	
0,9	84,0	84,7	83,4	84,4	84,5	82,5	84,3	84,0	81,4	84,0	84,0	81,4	84,0	84,0	81,4	84,0	84,0	81,4		

P_N kW	Manufacturer: Lowara srl Unipersonale, Reg. No. 341820260, Montecchio Maggiore Vicenza - Italia. Model	IEC SIZE	Construction Design	N. of Poles	f_N Hz	Data for 400 V / 50 Hz Voltage: cosφ	Is / I_N	T_N Nm	Ts/T_N	Tm/Tn
0,3	SM63SE/303	63	SPECIAL	2	50	0,72	4,05	1,05	3,29	2,63
0,45	SM65SE/304	63				0,66	4,32	1,38	4,14	3,13
0,55	SM63SE/305	63				0,71	4,41	1,73	3,70	2,62
0,75	SM80SE/307PE	80				0,78	7,38	2,48	3,57	3,75
0,9	SM80SE/311PE	80				0,79	8,31	3,63	3,95	3,95

	Voltage U_N V											n_N min^{-1}	See note.	Operating conditions **		
	Δ			Y			Δ			Y				Altitude Above Sea Level (m)	T. amb min/max °C	ATEX
P_N kW	220 V	230 V	240 V	380 V	400 V	415 V	380 V	400 V	415 V	660 V	690 V					
	I_N (A)															
0,3	1,65	1,70	1,78	0,95	0,98	1,03	-	-	-	-	-	2680 ÷ 2745				
0,45	2,20	2,34	2,51	1,27	1,35	1,45	-	-	-	-	-	2740 ÷ 2790				
0,55	2,53	2,63	2,81	1,46	1,52	1,62	-	-	-	-	-	2715 ÷ 2770		≤ 1000	-15 / 40	No
0,75	2,96	2,94	2,96	1,71	1,70	1,71	1,70	1,69	1,70	0,98	0,98	2875 ÷ 2895				
0,9	4,19	4,14	4,16	2,42	2,39	2,40	2,41	2,38	2,38	1,39	1,37	2870 ÷ 2900				

Note: Observe the regulations and codes locally in force regarding sorted waste disposal.

svi-e-ie2-mott-2p50-en_b_te

** Operating conditions to be referred to motor only. About electric pump, refer to limits in user's manual.

LOWARA
a xylem brand

SVI (S, N) SERIES
THREE-PHASE MOTORS AT 50 Hz, 2 POLES (up to 22 kW)

P_N	Efficiency η_N %																		IE	Year of manufacture
	Δ 220 V Y 380 V			Δ 230 V Y 400 V			Δ 240 V Y 415 V			Δ 380 V Y 660 V			Δ 400 V Y 690 V			Δ 415 V				
kW	4/4	3/4	2/4	4/4	3/4	2/4	4/4	3/4	2/4	4/4	3/4	2/4	4/4	3/4	2/4	4/4	3/4	2/4		
0,37	-	-	-	-	-	-	-	-	-	-	-	-	-	-	-	-	-	-	-	By June 2011
0,55	-	-	-	-	-	-	-	-	-	-	-	-	-	-	-	-	-	-	-	
0,75	82,5	83,1	81,3	82,8	82,7	80,1	82,6	82,0	78,9	82,5	82,0	78,9	82,5	82,0	78,9	82,5	82,0	78,9	3	
1,1	84,0	84,7	83,4	84,4	84,5	82,5	84,3	84,0	81,4	84,0	84,0	81,4	84,0	84,0	81,4	84,0	84,0	81,4		
1,5	85,6	86,5	85,8	85,9	86,4	84,9	86,0	86,0	84,0	85,6	86,0	84,0	85,6	86,0	84,0	85,6	86,0	84,0		
2,2	83,7	84,6	82,9	83,7	84,6	82,9	83,7	84,6	82,9	83,7	84,6	83,6	84,6	84,9	83,3	84,9	84,9	82,9	2	
3	86,1	87,0	85,6	86,1	87,0	85,6	86,1	87,0	85,6	86,1	87,4	87,1	86,6	87,4	86,5	86,7	87,0	85,6		
4	86,3	86,3	86,3	86,3	86,3	86,3	86,3	86,3	86,3	86,3	86,3	86,3	86,3	86,3	86,3	86,3	86,3	86,3		
5,5	87,6	87,6	87,6	87,6	87,6	87,6	87,6	87,6	87,6	87,6	87,6	87,6	87,6	87,6	87,6	87,6	87,6	87,6		
7,5	88,6	88,1	88,1	88,6	88,1	88,1	88,6	88,1	88,1	88,6	88,1	88,1	88,6	88,1	88,1	88,6	88,1	88,1		
11	90,3	91,1	90,3	90,3	91,1	90,3	90,3	91,1	90,3	90,3	91,1	90,3	90,8	91,1	90,3	91,0	91,1	90,3		
15	90,3	90,3	90,3	90,3	90,3	90,3	90,3	90,3	90,3	90,3	90,3	90,3	90,3	90,3	90,3	90,3	90,3	90,3		
18,5	91,2	91,2	91,2	91,2	91,2	91,2	91,2	91,2	91,2	91,2	91,2	91,2	91,2	91,2	91,2	91,2	91,2	91,2		
22	91,3	91,3	91,3	91,3	91,3	91,3	91,3	91,3	91,3	91,3	91,3	91,3	91,3	91,3	91,3	91,3	91,3	91,3		

P_N	Manufacturer: Lowara srl Unipersonale, Reg. No. 341820260, Montecchio Maggiore Vicenza - Italia	IEC SIZE*	Construction Design	N. of Poles	f_N	Data for 400 V / 50 Hz Voltage				
kW	Model				Hz	cosφ	Is / I_N	T_N Nm	T_s/T_N	Tm/Tn
0,37	SM71RB14/304	71R	V18/B14	2	50	0,66	4,32	1,38	4,14	3,13
0,55	SM71B14/305	71				0,74	5,97	1,85	3,74	3,56
0,75	SM80B14/307PE	80				0,78	7,38	2,48	3,57	3,75
1,1	SM80B14/311PE	80				0,79	8,31	3,63	3,95	3,95
1,5	SM90RB14/315PE	90R				0,80	8,80	4,96	4,31	4,10
2,2	PLM90B14/322	90				0,80	8,63	7,25	3,74	3,71
3	PLM100RB14/330	100R				0,82	8,39	9,96	3,50	3,32
4	PLM112RB14/340	112R				0,85	9,52	13,1	3,04	4,40
5,5	PLM132RB5/355	132R	V1/B5			0,87	10,3	18,1	4,43	5,80
7,5	PLM132B5/375	132				0,87	9,21	24,5	3,26	4,55
11	PLM160RB5/3110	160R				0,87	9,72	36,0	3,46	4,56
15	PLM160B5/3150	160				0,91	8,45	48,6	2,26	3,81
18,5	PLM160B5/3185	160				0,88	9,75	59,8	2,82	4,53
22	PLM180RB5/3220	180R				0,89	9,50	71,1	2,74	4,26

P_N	Voltage U_N V											n_N	Observe the regulations and codes locally in force regarding sorted waste disposal.	Operating conditions **		
	Δ			Y			Δ			Y				Altitude Above Sea Level (m)	T. amb min/max °C	ATEX
kW	220 V	230 V	240 V	380 V	400 V	415 V	380 V	400 V	415 V	660 V	690 V	min^{-1}				
	I_N (A)															
0,37	2,20	2,34	2,51	1,27	1,35	1,45	-	-	-	-	-	2740 ÷ 2790				
0,55	2,56	2,56	2,62	1,48	1,48	1,51	-	-	-	-	-	2825 ÷ 2850				
0,75	2,96	2,94	2,96	1,71	1,70	1,71	1,70	1,69	1,70	0,98	0,98	2875 ÷ 2895				
1,1	4,19	4,14	4,16	2,42	2,39	2,40	2,41	2,38	2,38	1,39	1,37	2870 ÷ 2900				
1,5	5,56	5,49	5,51	3,21	3,17	3,18	3,21	3,18	3,19	1,85	1,84	2870 ÷ 2895				
2,2	8,05	8,04	8,09	4,65	4,64	4,67	4,62	4,61	4,63	2,67	2,66	2885 ÷ 2900				
3	10,8	10,6	10,6	6,23	6,14	6,12	6,18	6,10	6,06	3,57	3,52	2850 ÷ 2885				
4	13,6	13,5	13,5	7,88	7,77	7,79	7,80	7,63	7,65	4,51	4,41	2895 ÷ 2920				
5,5	18,3	18,0	17,9	10,6	10,4	10,3	10,6	10,4	10,5	6,14	6,02	2885 ÷ 2905				
7,5	25,4	24,8	24,4	14,7	14,3	14,1	14,5	14,0	13,9	8,35	8,11	2920 ÷ 2935				
11	36,0	35,1	34,7	20,8	20,3	20,0	20,8	20,3	20,1	12,0	11,7	2910 ÷ 2925				
15	47,2	45,3	44,0	27,2	26,2	25,4	27,2	26,0	25,3	15,7	15,0	2940 ÷ 2950				
18,5	58,3	56,9	55,9	33,7	32,9	32,3	34,1	33,2	32,8	19,7	19,1	2945 ÷ 2955				
22	68,3	66,2	64,3	39,4	38,2	37,1	40,0	38,6	37,8	23,1	22,3	2945 ÷ 2955		≤ 1000	-15 / 40	No

* R = Reduced size of motor casing as compared to shaft extension and flange.

svi-s-ie2-mott-2p50-en_b_te

** Operating conditions to be referred to motor only. About electric pump, refer to limits in user's manual.

SVI (S, N) SERIES
THREE-PHASE MOTORS AT 50 Hz, 2 POLES (from 30 kW)

P_N kW	Efficiency η_N % Δ 380 V Y 660 V 4/4	3/4	2/4	Δ 400 V Y 690 V 4/4	3/4	2/4	Δ 415 V 4/4	3/4	2/4	IE	Year of manufacture
30	92,6	92,9	92,7	92,5	93,0	92,9	93,0	93,0	92,3	2	By June 2011

P_N kW	Manufacturer: WEG Equipamentos Eletricos S.A. Reg. No. 07.175.725/0010-50 Jaragua do Sul - SC (Brazil) Model	IEC SIZE	Construction Design	N. of Poles	f_N Hz	Data for 400 V / 50 Hz Voltage cosφ	Is / I_N	T_N Nm	Ts/T_N	Tm/Tn
30	W22 200L2-B5 30kW	200	V1/B5	2	50	0,87	6,50	97,0	2,40	2,70

P_N kW	Voltage U_N V Δ 380 V	400 V	415 V	Y 660 V	690 V	I_N (A)	n_N min^{-1}	See note.	Operating conditions ** Altitude Above Sea Level (m)	T. amb min/max °C	ATEX
30	55,9	53,6	52,2	32,2	31,1		2950 ÷ 2960		≤ 1000	-15 / 40	No

** Operating conditions to be referred to motor only. About electric pump, refer to limits in user's manual.

svi-s-ie2-mott30-2p50-en_a_te

Note: Observe the regulations and codes locally in force regarding sorted waste disposal.

MOTOR NOISE

The tables below show the mean sound pressure levels (Lp) measured at 1 meter's distance in a free field according to the A curve (ISO 1680 standard).
The noise values are measured with idling 50 Hz motor with a tolerance of 3 dB (A).

SVI (E, EN) THREE-PHASE 50 Hz, 2 POLES MOTORS

POWER kW	MOTOR TYPE IEC SIZE	NOISE LpA dB
0,37	63	<70
0,45	63	<70
0,55	63	<70
0,75	71	<70
0,9	71	<70

SVI (S, N) THREE-PHASE 50 Hz, 2 POLES MOTORS

POWER kW	MOTOR TYPE IEC SIZE*	RUMOROSITA' LpA dB
0,37	71R	<70
0,55	71	<70
0,75	80R	<70
1,1	80	<70
1,5	90R	<70
2,2	90R	<70
3	100R	<70
4	112R	<70
5,5	132R	<70
7,5	132	71
11	160R	73
15	160	71
18,5	160	73
22	180R	70
30	200	72

*R=Reduced motor casing size with respect to shaft extension and related flange.

sv_mott-en_b_tr

LOWARA
a xylem brand

AVAILABLE VOLTAGES
MOTORS FOR SVI SERIES (up to 22 kW)

	THREE-PHASE - 2 POLES															
	50 Hz							60 Hz							50/60 Hz	
P_N kW	3 x 220-230-240/380-400-415	3 x 380-400-415/660-690	3 x 200-208/346-360	3 x 255-265/440-460	3 x 290-300/500-525	3 x 440-460/-	3 x 500-525/-	3 x 220-230/380-400	3 x 255-265-277/440-460-480	3 x 380-400/660-690	3 x 440-460-480/-	3 x 110-115/190-200	3 x 200-208/346-360	3 x 330-346/575-600	3 x 575/-	3 x 230/400 50 Hz 3 x 265/460 60 Hz	3 x 400/690 50 Hz 3 x 460/- 60 Hz
0,3	s	o	o	o	o	o	o	s	o	o	o	o	o	o	o	o	o
0,37	s	o	o	o	o	o	o	s	o	o	o	o	o	o	o	o	o
0,4	s	o	o	o	o	o	o	s	o	o	o	o	o	o	o	o	o
0,5	s	o	o	o	o	o	o	s	o	o	o	o	o	o	o	o	o
0,55	s	o	o	o	o	o	o	s	o	o	o	o	o	o	o	o	o
0,75	s	o	o	o	o	o	o	s	o	o	o	o	o	o	o	o	o
0,95	s	o	o	o	o	o	o	s	o	o	o	o	o	o	o	o	o
1,1	s	o	o	o	o	o	o	s	o	o	o	o	o	o	o	o	o
1,5	s	o	o	o	o	o	o	s	o	o	o	o	o	o	o	o	o
2,2	s	o	o	o	o	o	o	s	o	o	o	o	o	o	o	o	o
3	s	o	o	o	o	o	o	s	o	o	o	o	o	o	o	o	o
4	o	s	o	o	o	o	o	s	o	o	o	o	o	o	o	o	o
5,5	o	s	o	o	o	o	o	s	o	o	o	o	o	o	o	o	o
7,5	o	s	o	o	o	o	o	s	o	o	o	o	o	o	o	o	o
11	o	s	o	o	o	o	o	s	o	o	o	o	o	o	o	o	o
15	o	s	o	o	o	o	o	s	o	o	o	o	o	o	o	o	o
18,5	o	s	o	o	o	o	o	s	o	o	o	o	o	o	o	o	o
22	o	s	o	o	o	o	o	s	o	o	o	o	o	o	o	o	o

s = Standard voltage o = Optional voltage - = Not available

svi-volt-lowa-en_a_te

MOTORS FOR SVI SERIES (≥ 30 kW)

	THREE-PHASE - 2 POLES															
	50 Hz							60 Hz							50/60 Hz	
PN kW	3 x 220-230-240/380-400-415	3 x 380-400-415/660-690	3 x 110/190	3 x 200-208/346-360	3 x 255-265/440-460	3 x 290-300/500-525	3 x 440-460/-	3 x 500-525/-	3 x 230/380	3 x 380-400/660-690	3 x 440-480/-	3 x 110-115/190-200	3 x 200-208/346-360	3 x 255-265-277/440-460-480	3 x 330-346/575-600	3 x 575/-	3 x 230/400 50 Hz 3 x 265/460 60 Hz	3 x 400/690 50 Hz 3 x 460/- 60 Hz
30	o	s	o	o	o	o	o	o	s	o	o	o	o	o	o	o	o	o

s = Standard voltage o = Optional voltage - = Not available

svi-volt-weg-en_b_te

LOWARA
a xylem brand

SVI SERIES
HYDRAULIC PERFORMANCE RANGE AT 50 Hz

SVIE - SVIS	~ 2900 [rpm]	ISO 9906 - Annex A

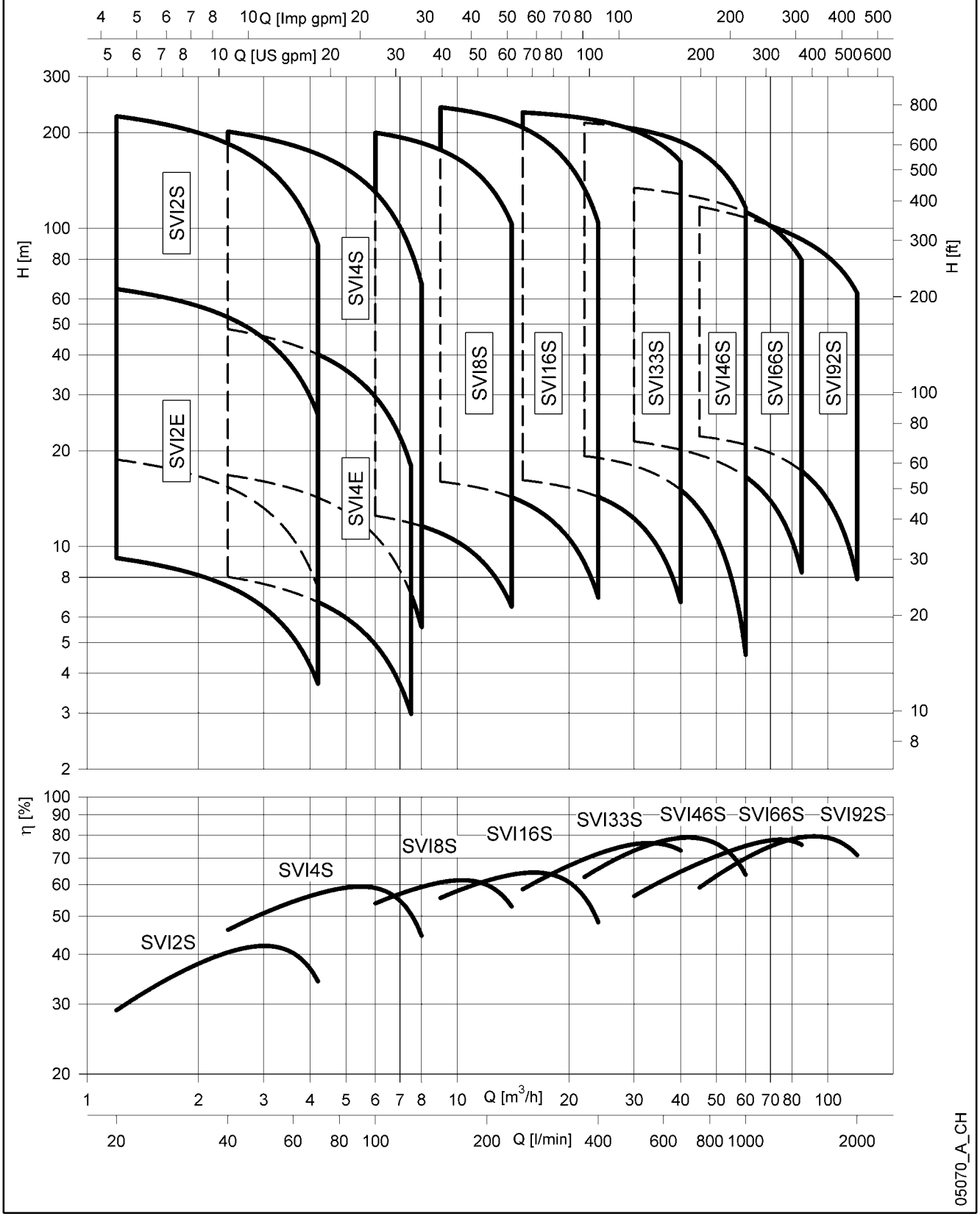

LOWARA
a xylem brand

SVI 2, 4 SERIES
TABLE OF HYDRAULIC PERFORMANCES AT 50 Hz, 2 POLES

PUMP TYPE	RATED POWER		Q = DELIVERY											
			l/min 0	20	30	40	50	60	70	80	90	100	110	120
			m³/h 0	1,2	1,8	2,4	3	3,6	4,2	4,8	5,4	6	6,6	7,2
	kW	HP	H = TOTAL HEAD METRES COLUMN OF WATER											
SVI 201E	0,37	0,5	10,6	9,2	8,4	7,5	6,5	5,2	3,7					
SVI 202E	0,37	0,5	21,2	18,4	16,8	15,0	12,9	10,4	7,4					
SVI 203E	0,45	0,6	31,8	27,6	25,3	22,5	19,4	15,6	11,1					
SVI 204E	0,55	0,75	42,4	36,9	33,7	30,1	25,8	20,8	14,8					
SVI 205E	0,75	1	53,0	46,1	42,1	37,6	32,3	26,0	18,6					
SVI 206E	0,75	1	63,7	55,3	50,5	45,1	38,7	31,2	22,3					
SVI 207E	0,9	1,2	74,3	64,5	58,9	52,6	45,2	36,4	26,0					
SVI 401E	0,37	0,5	9,5			8,0	7,6	7,2	6,7	6,2	5,6	4,9	4,2	3,4
SVI 402E	0,37	0,5	19,0			16,1	15,3	14,4	13,4	12,3	11,2	9,9	8,4	6,8
SVI 403E	0,45	0,6	28,5			24,1	22,9	21,5	20,1	18,5	16,7	14,8	12,6	10,2
SVI 404E	0,55	0,75	38,0			32,1	30,5	28,7	26,8	24,7	22,3	19,7	16,8	13,6
SVI 405E	0,75	1	47,5			40,2	38,1	35,9	33,5	30,8	27,9	24,6	21,0	17,1
SVI 406E	0,9	1,2	57,0			48,2	45,8	43,1	40,2	37,0	33,5	29,6	25,3	20,5
SVI 202S	0,37	0,5	21,4	18,8	17,2	15,4	13,2	10,6	7,4					
SVI 203S	0,37	0,5	32,1	28,1	25,8	23,1	19,8	15,9	11,1					
SVI 204S	0,55	0,75	42,8	37,5	34,4	30,8	26,4	21,2	14,8					
SVI 205S	0,75	1	53,5	46,9	43,0	38,5	33,0	26,5	18,6					
SVI 206S	0,75	1	64,2	56,3	51,6	46,2	39,6	31,7	22,3					
SVI 207S	1,1	1,5	74,9	65,6	60,2	53,9	46,2	37,0	26,0					
SVI 208S	1,1	1,5	85,6	75,0	68,8	61,5	52,8	42,3	29,7					
SVI 209S	1,1	1,5	96,3	84,4	77,4	69,2	59,4	47,6	33,4					
SVI 211S	1,5	2	117,7	103,2	94,6	84,6	72,6	58,2	40,8					
SVI 212S	1,5	2	128,4	112,5	103,2	92,3	79,2	63,5	44,5					
SVI 214S	2,2	3	149,8	131,3	120,4	107,7	92,5	74,1	52,0					
SVI 216S	2,2	3	171,2	150,1	137,7	123,1	105,7	84,7	59,4					
SVI 218S	2,2	3	192,6	168,8	154,9	138,5	118,9	95,2	66,8					
SVI 220S	3	4	214,0	187,6	172,1	153,9	132,1	105,8	74,2					
SVI 222S	3	4	235,4	206,3	189,3	169,2	145,3	116,4	81,7					
SVI 224S	3	4	256,8	225,1	206,5	184,6	158,5	127,0	89,1					
SVI 402S	0,37	0,5	19,3			16,8	16,0	15,2	14,3	13,2	12,1	10,8	9,4	7,9
SVI 403S	0,55	0,75	28,9			25,2	24,0	22,8	21,4	19,8	18,1	16,2	14,1	11,8
SVI 404S	0,75	1	38,5			33,6	32,0	30,4	28,5	26,5	24,2	21,6	18,9	15,8
SVI 405S	1,1	1,5	48,2			42,0	40,1	38,0	35,6	33,1	30,2	27,1	23,6	19,7
SVI 406S	1,1	1,5	57,8			50,4	48,1	45,6	42,8	39,7	36,3	32,5	28,3	23,7
SVI 407S	1,1	1,5	67,5			58,7	56,1	53,1	49,9	46,3	42,3	37,9	33,0	27,6
SVI 408S	1,5	2	77,1			67,1	64,1	60,7	57,0	52,9	48,3	43,3	37,7	31,5
SVI 409S	1,5	2	86,7			75,5	72,1	68,3	64,2	59,5	54,4	48,7	42,4	35,5
SVI 411S	2,2	3	106,0			92,3	88,1	83,5	78,4	72,8	66,5	59,5	51,9	43,4
SVI 413S	2,2	3	125,3			109,1	104,2	98,7	92,7	86,0	78,6	70,4	61,3	51,3
SVI 414S	3	4	134,9			117,5	112,2	106,3	99,8	92,6	84,6	75,8	66,0	55,2
SVI 416S	3	4	154,2			134,3	128,2	121,5	114,1	105,8	96,7	86,6	75,4	63,1
SVI 418S	3	4	173,5			151,1	144,2	136,7	128,3	119,0	108,8	97,4	84,8	71,0
SVI 420S	4	5,5	192,7			167,9	160,2	151,8	142,6	132,3	120,9	108,2	94,3	78,9
SVI 422S	4	5,5	212,0			184,6	176,3	167,0	156,8	145,5	133,0	119,1	103,7	86,7
SVI 424S	4	5,5	231,3			201,4	192,3	182,2	171,1	158,7	145,0	129,9	113,1	94,6

Performances in compliance with ISO 9906 - Annex A.

svi2-4-2p50-en_a_th

LOWARA
a xylem brand

SVI 8, 16 SERIES
TABLE OF HYDRAULIC PERFORMANCES AT 50 Hz, 2 POLES

PUMP TYPE	RATED POWER		Q = DELIVERY											
			l/min 0	100	125	150	175	200	233	250	275	300	350	400
			m³/h 0	6	7,5	9	10,5	12	14	15	16,5	18	21	24
	kW	HP	H = TOTAL HEAD METRES COLUMN OF WATER											
SVI 801S	0,75	1	14,0	12,5	11,8	11,0	10,0	8,7	6,5					
SVI 802S	1,1	1,5	28,0	25,0	23,7	22,1	20,0	17,4	13,0					
SVI 803S	1,5	2	42,0	37,5	35,5	33,1	29,9	26,0	19,4					
SVI 804S	2,2	3	56,0	50,0	47,4	44,1	39,9	34,7	25,9					
SVI 805S	2,2	3	70,0	62,4	59,2	55,1	49,9	43,4	32,4					
SVI 806S	3	4	84,0	74,9	71,1	66,2	59,9	52,1	38,9					
SVI 808S	4	5,5	112,0	99,9	94,8	88,2	79,9	69,5	51,8					
SVI 809S	4	5,5	126,0	112,4	106,6	99,2	89,8	78,1	58,3					
SVI 811S	5,5	7,5	154,0	137,4	130,3	121,3	109,8	95,5	71,3					
SVI 812S	5,5	7,5	168,0	149,9	142,2	132,3	119,8	104,2	77,8					
SVI 814S	7,5	10	196,0	174,9	165,9	154,4	139,8	121,5	90,7					
SVI 816S	7,5	10	224,0	199,8	189,6	176,4	159,7	138,9	103,7					
SVI 1601S	1,1	1,5	16,9			16,0	15,6	15,1	14,3	13,8	13,0	12,1	9,8	6,9
SVI 1602S	2,2	3	33,7			32,0	31,2	30,2	28,6	27,6	26,0	24,1	19,6	13,9
SVI 1603S	3	4	50,6			48,0	46,8	45,3	42,9	41,5	39,0	36,2	29,4	20,8
SVI 1604S	4	5,5	67,5			64,0	62,4	60,4	57,2	55,3	52,0	48,3	39,1	27,7
SVI 1605S	5,5	7,5	84,3			80,0	78,0	75,6	71,5	69,1	65,0	60,3	48,9	34,6
SVI 1606S	5,5	7,5	101,2			96,0	93,6	90,7	85,8	82,9	78,0	72,4	58,7	41,6
SVI 1607S	7,5	10	118,1			112,0	109,2	105,8	100,1	96,7	91,0	84,5	68,5	48,5
SVI 1608S	7,5	10	134,9			128,0	124,8	120,9	114,4	110,6	104,0	96,5	78,3	55,4
SVI 1610S	11	15	168,7			160,0	156,0	151,1	143,0	138,2	130,0	120,7	97,9	69,3
SVI 1612S	11	15	202,4			192,0	187,2	181,3	171,6	165,8	156,1	144,8	117,4	83,1
SVI 1614S	15	20	236,1			224,0	218,4	211,6	200,2	193,5	182,1	168,9	137,0	97,0
SVI 1615S	15	20	253,0			240,0	234,1	226,7	214,5	207,3	195,1	181,0	146,8	103,9

Performances in compliance with ISO 9906 - Annex A.

svi8-16-2p50-en_a_th

LOWARA
a xylem brand

SVI 33, 46 SERIES
TABLE OF HYDRAULIC PERFORMANCES AT 50 Hz, 2 POLES

PUMP TYPE	RATED POWER		Q = DELIVERY											
			l/min 0	250	300	366,7	400	500	600	666,7	700	800	900	1000
			m³/h 0	15	18	22	24	30	36	40	42	48	54	60
	kW	HP	H = TOTAL HEAD METRES COLUMN OF WATER											
SVI 3301/1S	2,2	3	17,4	16,2	15,7	14,9	14,3	12,2	9,3	6,7				
SVI 3301S	3	4	23,8	21,7	21,2	20,3	19,8	17,8	15,0	12,7				
SVI 3302/2S	4	5,5	35,1	34,1	33,3	31,8	30,8	26,9	21,4	16,6				
SVI 3302/1S	4	5,5	40,8	38,8	37,9	36,3	35,4	31,7	26,6	22,3				
SVI 3303/2S	5,5	7,5	57,7	55,2	53,8	51,4	49,9	44,1	36,2	29,6				
SVI 3303S	7,5	10	71,5	67,4	66,2	64,0	62,7	57,7	50,7	44,6				
SVI 3304S	11	15	95,9	91,1	89,7	87,2	85,7	79,6	70,8	63,1				
SVI 3305/1S	11	15	112,7	107,2	105,3	101,9	99,8	91,7	80,0	70,0				
SVI 3306/2S	15	20	131,2	126,9	124,6	120,3	117,7	107,5	93,2	81,2				
SVI 3307/2S	15	20	156,0	149,9	147,3	142,7	139,8	128,4	112,2	98,2				
SVI 3307S	18,5	25	170,3	162,8	160,2	155,7	153,0	142,2	126,7	113,2				
SVI 3308/1S	18,5	25	187,4	179,5	176,5	171,3	168,1	155,5	137,4	121,7				
SVI 3309/1S	22	30	210,2	201,2	197,8	191,8	188,2	173,8	153,4	135,9				
SVI 3310/2S	22	30	226,4	217,2	213,4	206,8	202,6	186,4	163,5	143,9				
SVI 3310S	30	40	241,8	231,3	227,8	221,7	217,9	202,9	181,1	162,1				
SVI 4601/1S	3	4	19,5			19,2	19,0	17,9	16,4	15,1	14,4	11,7	8,5	4,6
SVI 4601S	4	5,5	27,2			24,0	23,7	22,5	21,1	19,9	19,3	17,1	14,3	10,8
SVI 4602/2S	5,5	7,5	38,8			39,8	39,4	37,8	35,2	32,9	31,6	26,9	21,1	13,9
SVI 4602S	7,5	10	52,6			48,5	48,0	46,1	43,7	41,7	40,6	36,5	31,4	25,1
SVI 4603S	11	15	80,8			74,3	73,5	70,9	67,4	64,6	62,9	57,1	49,8	40,7
SVI 4604/2S	15	20	92,4			90,7	89,9	86,9	82,5	78,6	76,3	68,3	58,2	45,6
SVI 4605S	18,5	25	134,5			125,1	124,0	120,0	114,7	110,2	107,6	98,3	86,4	71,5
SVI 4606S	22	30	161,0			149,8	148,5	143,8	137,4	132,0	128,9	117,8	103,7	86,0
SVI 4607/2S	30	40	171,3			164,9	163,6	158,3	150,8	144,3	140,6	127,1	109,9	88,6
SVI 4608/2S	30	40	198,2			190,0	188,4	182,4	173,8	166,4	162,2	146,9	127,3	103,1
SVI 4609/2S	30	40	224,8			214,5	212,6	205,6	195,7	187,3	182,5	165,2	143,2	116,0

Performances in compliance with ISO 9906 - Annex A.

svi33-46-2p50-en_a_th

LOWARA
a xylem brand

SVI 66, 92 SERIES
TABLE OF HYDRAULIC PERFORMANCES AT 50 Hz, 2 POLES

PUMP TYPE	RATED POWER		Q = DELIVERY											
			l/min 0	500	600	750	900	1000	1100	1200	1416,7	1600	1800	2000
			m^3/h 0	30	36	45	54	60	66	72	85	96	108	120
	kW	HP	H = TOTAL HEAD METRES COLUMN OF WATER											
SVI 6601/1S	4	5,5	23,8	21,4	20,7	19,4	17,8	16,6	15,1	13,3	8,3			
SVI 6601S	5,5	7,5	29,2	25,8	24,8	23,3	21,8	20,7	19,4	17,9	13,4			
SVI 6602/2S	7,5	10	47,5	42,6	41,2	38,6	35,5	32,9	30,0	26,4	16,4			
SVI 6602S	11	15	60,4	55,7	54,4	52,0	49,3	47,1	44,7	42,0	34,6			
SVI 6603/2S	15	20	78,4	71,6	69,6	65,9	61,5	57,9	53,8	49,0	35,3			
SVI 6603S	18,5	25	91,4	84,7	82,7	79,3	75,2	72,0	68,5	64,4	53,5			
SVI 6604/1S	22	30	115,2	105,9	103,1	98,5	92,9	88,6	83,6	77,8	61,7			
SVI 6605/1S	30	40	145,6	134,0	130,5	124,7	117,8	112,4	106,3	99,2	79,4			
SVI 9201/1S	5,5	7,5	24,5			22,2	21,5	20,9	20,2	19,4	17,3	15,0	11,8	7,9
SVI 9201S	7,5	10	33,5			28,7	27,2	26,2	25,3	24,3	22,2	20,2	17,6	14,3
SVI 9202/2S	11	15	49,4			45,1	43,7	42,5	41,2	39,6	35,5	30,9	24,6	16,8
SVI 9202S	15	20	67,8			58,2	55,3	53,4	51,4	49,5	45,3	41,4	36,3	29,6
SVI 9203/2S	18,5	25	82,4			74,4	71,6	69,6	67,3	64,8	58,6	52,2	43,6	32,9
SVI 9203S	22	30	102,2			88,2	84,0	81,2	78,4	75,5	69,2	63,4	55,9	46,3
SVI 9204/2S	30	40	115,7			104,0	99,9	97,0	93,8	90,4	82,2	73,8	62,8	49,0
SVI 9204S	30	40	133,1			117,0	111,7	108,0	104,4	100,6	92,3	84,6	74,8	62,5

Performances in compliance with ISO 9906 - Annex A.

svi66-92-2p50-en_a_th

SVI 2 (E, EN) SERIES
DIMENSIONS AND WEIGHTS AT 50 Hz, 2 POLES

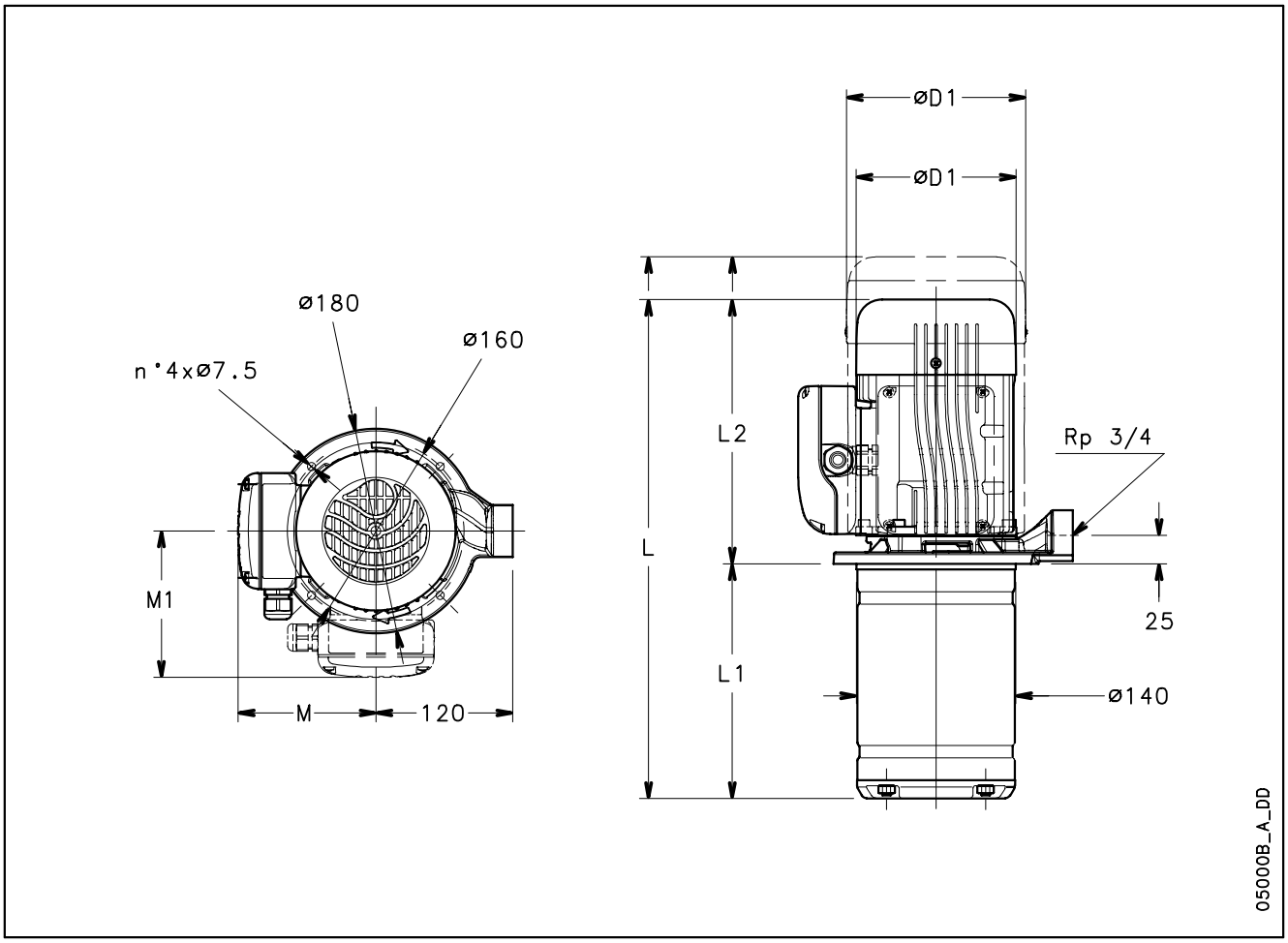

PUMP TYPE	MOTOR		DIMENSIONS (mm)						ELECTRIC PUMP WEIGHT
	kW	SIZE	L	L1	L2	M	M1	D1	kg
SVI201/03E03T/A	0,37	63	324	106	218	111	-	120	8,8
SVI202/03E03T/A	0,37	63	324	106	218	111	-	120	8,9
SVI203/03E04T/A	0,45	63	324	106	218	111	-	120	9,8
SVI204/04E05T/A	0,55	63	349	131	218	111	-	120	10,6
SVI205/05E07T/D	0,75	80	433	156	276	-	129	155	15,4
SVI206/06E07T/D	0,75	80	458	181	276	-	129	155	15,8
SVI207/07E09T/D	0,9	80	483	206	276	-	129	155	16,9

svi2e-2p50-en_d_td

	PUMP TYPE	MOTOR		DIMENS. L2 mm	NUMBER OF STAGES							
					3	4	5	6	7	8	10	13
		kW	SIZE		L1 Shank increased lengths (AVAILABLE ON REQUEST *)							
N. OF IMPELLERS	SVI201/..	0,37	63	218	106	131	156	181	206	231	281	356
	SVI202/..	0,37	63	218	106	131	156	181	206	231	281	356
	SVI203/..	0,45	63	218	106	131	156	181	206	231	281	356
	SVI204/..	0,55	63	218		131	156	181	206	231	281	356
	SVI205/..	0,75	80	276	L1 Standard		156	181	206	231	281	356
	SVI206/..	0,75	80	276				181	206	231	281	356
	SVI207/..	0,9	80	276					206	231	281	356

* The hydraulic performances of the electric pumps with shank increased lenghts can be lower than standard version.

svi2e-en_c_tcm

LOWARA
a xylem brand

SVI 2 (E, EN) SERIES
OPERATING CHARACTERISTICS AT 50 Hz, 2 POLES, 2 POLES

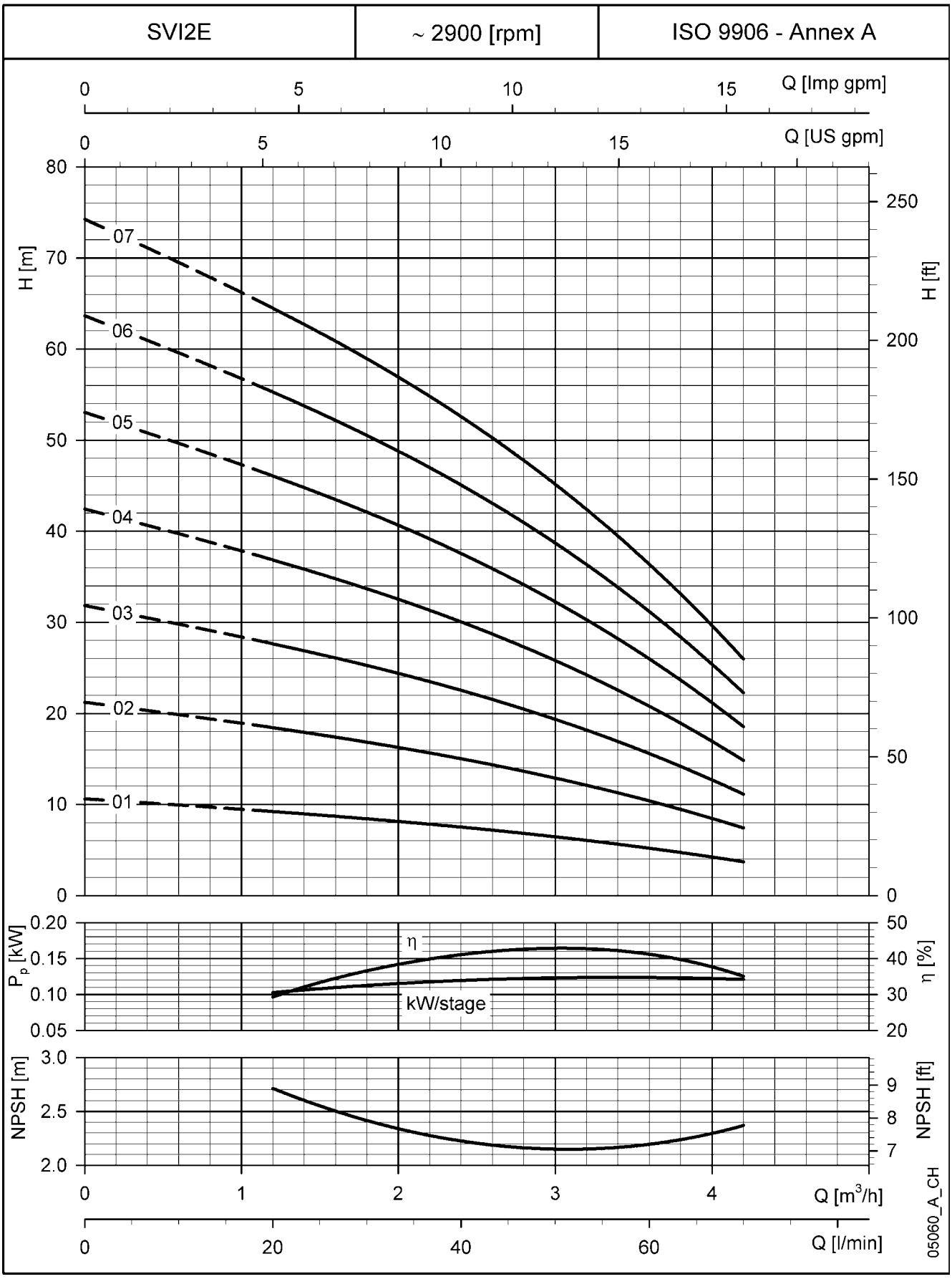

These performances are valid for liquids with density ρ = 1.0 Kg/dm³ and kinematic viscosity ν = 1 mm²/sec.

SVI 4 (E, EN) SERIES
DIMENSIONS AND WEIGHTS AT 50 Hz, 2 POLES

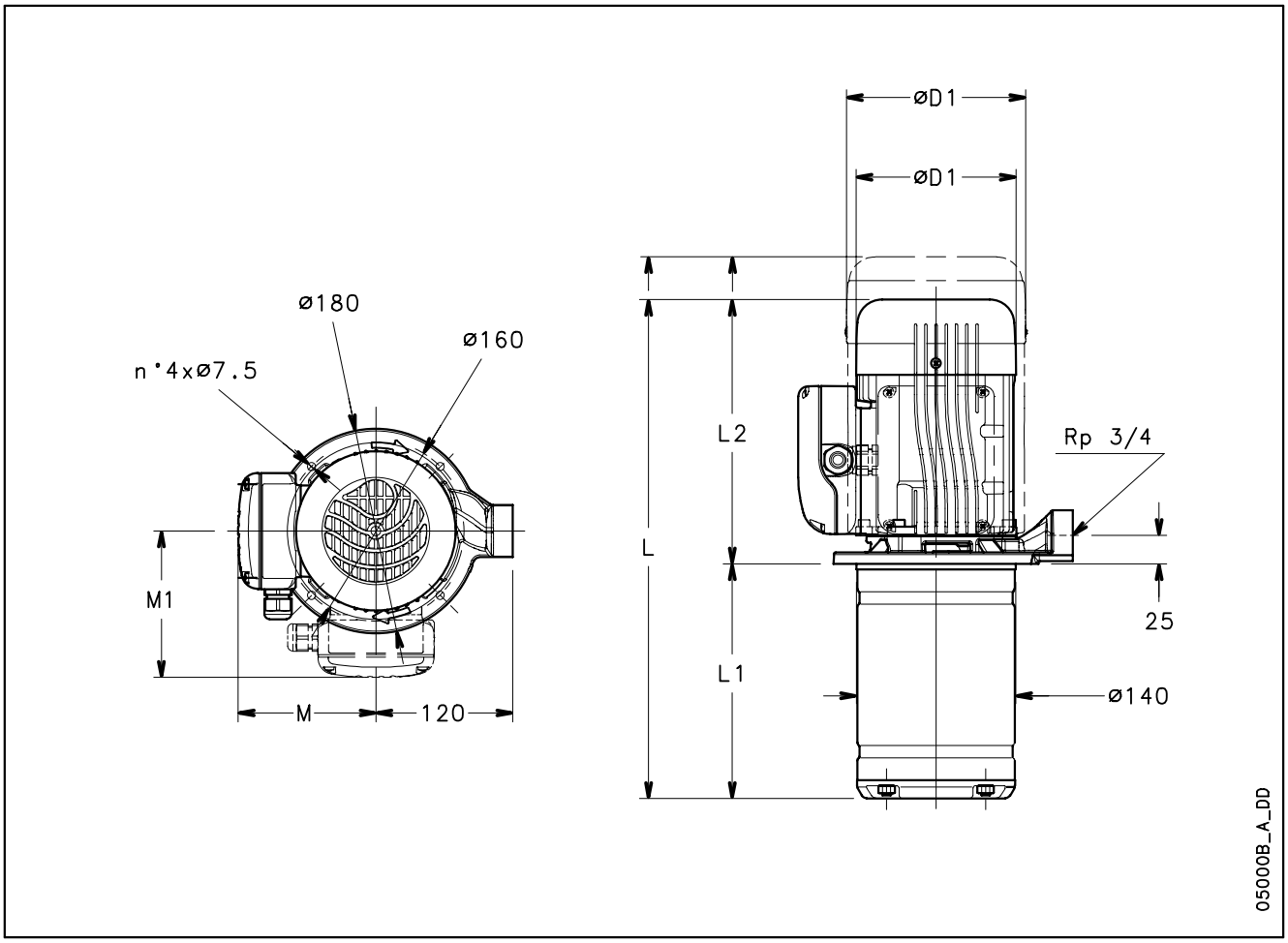

PUMP TYPE	MOTOR		DIMENSIONS (mm)						ELECTRIC PUMP WEIGHT
	kW	SIZE	L	L1	L2	M	M1	D1	kg
SVI401/03E03T/A	0,37	63	324	106	218	111	-	120	8,8
SVI402/03E03T/A	0,37	63	324	106	218	111	-	120	8,9
SVI403/03E04T/A	0,45	63	324	106	218	111	-	120	9,8
SVI404/04E05T/A	0,55	63	349	131	218	111	-	120	10,6
SVI405/05E07T/D	0,75	80	433	156	276	-	129	155	15,4
SVI406/06E09T/D	0,9	80	458	181	276	-	129	155	16,5

svi4e-2p50-en_d_td

	PUMP TYPE	MOTOR		DIMENS. L2 mm	NUMBER OF STAGES							
					3	4	5	6	7	8	10	13
		kW	SIZE		L1 Shank increased lengths (AVAILABLE ON REQUEST *)							
N. OF IMPELLERS	SVI401/..	0,37	63	218	106	131	156	181	206	231	281	356
	SVI402/..	0,37	63	218	106	131	156	181	206	231	281	356
	SVI403/..	0,45	63	218	106	131	156	181	206	231	281	356
	SVI404/..	0,55	63	218		131	156	181	206	231	281	356
	SVI405/..	0,75	80	276	L1 Standard		156	181	206	231	281	356
	SVI406/..	0,99	80	276				181	206	231	281	356

* The hydraulic performances of the electric pumps with shank increased lenghts can be lower than standard version.

svi4e-en_c_tcm

SVI 4 (E, EN) SERIES
OPERATING CHARACTERISTICS AT 50 Hz, 2 POLES

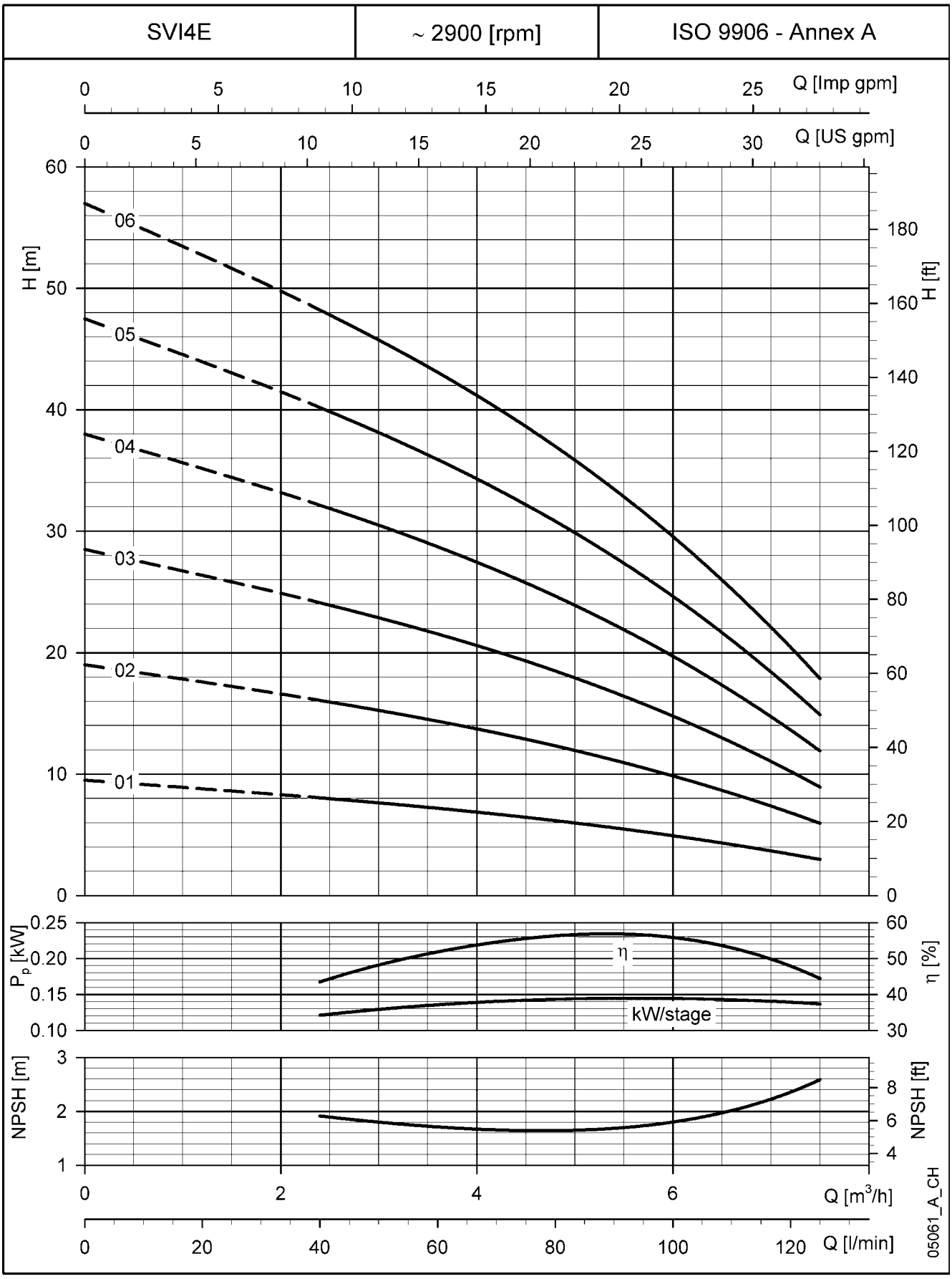

These performances are valid for liquids with density ρ = 1.0 Kg/dm³ and kinematic viscosity ν = 1 mm²/sec.

LOWARA
a xylem brand

SVI 2 (S, N) SERIES
DIMENSIONS AND WEIGHTS AT 50 Hz, 2 POLES

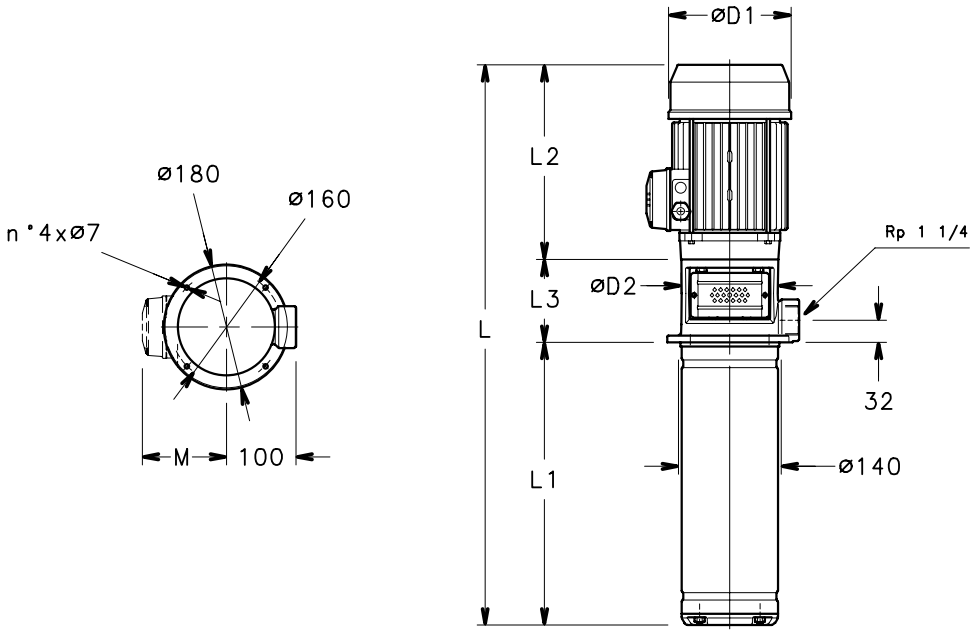

PUMP TYPE	MOTOR		DIMENSIONS (mm)							ELECTRIC PUMP WEIGHT
	kW	SIZE	L	L1	L2	L3	M	D1	D2	kg
SVI202/02S03T/A	0,37	71	416	107	209	100	111	120	105	14
SVI203/03S03T/A	0,37	71	441	132	209	100	111	120	105	14
SVI204/04S05T/A	0,55	71	488	157	231	100	121	140	105	15
SVI205/05S07T/D	0,75	80	555	182	263	110	129	155	120	20
SVI206/06S07T/D	0,75	80	580	207	263	110	129	155	120	20
SVI207/07S11T/D	1,1	80	604	231	263	110	129	155	120	21
SVI208/08S11T/D	1,1	80	629	256	263	110	129	155	120	21
SVI209/09S11T/D	1,1	80	654	281	263	110	129	155	120	22
SVI211/11S15T/D	1,5	90	714	331	263	120	129	155	140	26
SVI212/12S15T/D	1,5	90	739	356	263	120	129	155	140	26
SVI214/14S22T/C	2,2	90	824	406	298	120	134	174	140	32
SVI216/16S22T/C	2,2	90	874	456	298	120	134	174	140	33
SVI218/18S22T/C	2,2	90	924	506	298	120	134	174	140	34
SVI220/20S30T/P	3	100	984	556	298	130	134	174	160	35
SVI222/22S30T/P	3	100	1034	606	298	130	134	174	160	35
SVI224/24S30T/P	3	100	1084	656	298	130	134	174	160	36

svi2s-2p50-en_d_td

	PUMP TYPE	MOTOR		DIMENS. L2+L3	NUMBER OF STAGES																	
					2	3	4	5	6	7	8	9	11	12	13	14	15	16	18	20	22	24
		kW	SIZE	mm	L1 Shank increased lengths (AVAILABLE ON REQUEST *)																	
NUMBER OF IMPELLERS	SVI202/..	0,37	71	309	107	132	157	182	207	231	256	281	331	356	381	406	431	456	506	556	606	656
	SVI203/..	0,37	71	309		132	157	182	207	231	256	281	331	356	381	406	431	456	506	556	606	656
	SVI204/..	0,55	71	331			157	182	207	231	256	281	331	356	381	406	431	456	506	556	606	656
	SVI205/..	0,75	80	373				182	207	231	256	281	331	356	381	406	431	456	506	556	606	656
	SVI206/..	0,75	80	373					207	231	256	281	331	356	381	406	431	456	506	556	606	656
	SVI207/..	1,1	80	373						231	256	281	331	356	381	406	431	456	506	556	606	656
	SVI208/..	1,1	80	373							256	281	331	356	381	406	431	456	506	556	606	656
	SVI209/..	1,1	80	373								281	331	356	381	406	431	456	506	556	606	656
	SVI211/..	1,5	90	383									331	356	381	406	431	456	506	556	606	656
	SVI212/..	1,5	90	383										356	381	406	431	456	506	556	606	656
	SVI214/..	2,2	90	418												406	431	456	506	556	606	656
	SVI216/..	2,2	90	418														456	506	556	606	656
	SVI218/..	2,2	90	418															506	556	606	656
	SVI220/..	3	100	428																556	606	656
	SVI222/..	3	100	428																	606	656
	SV224/..	3	100	428																		656

L1 Standard

* The hydraulic performances of the electric pumps with shank increased lenghts can be lower than standard version.

svi2s-en_d_tcm

LOWARA
a xylem brand

SVI 2 (S, N) SERIES
OPERATING CHARACTERISTICS AT 50 Hz, 2 POLES

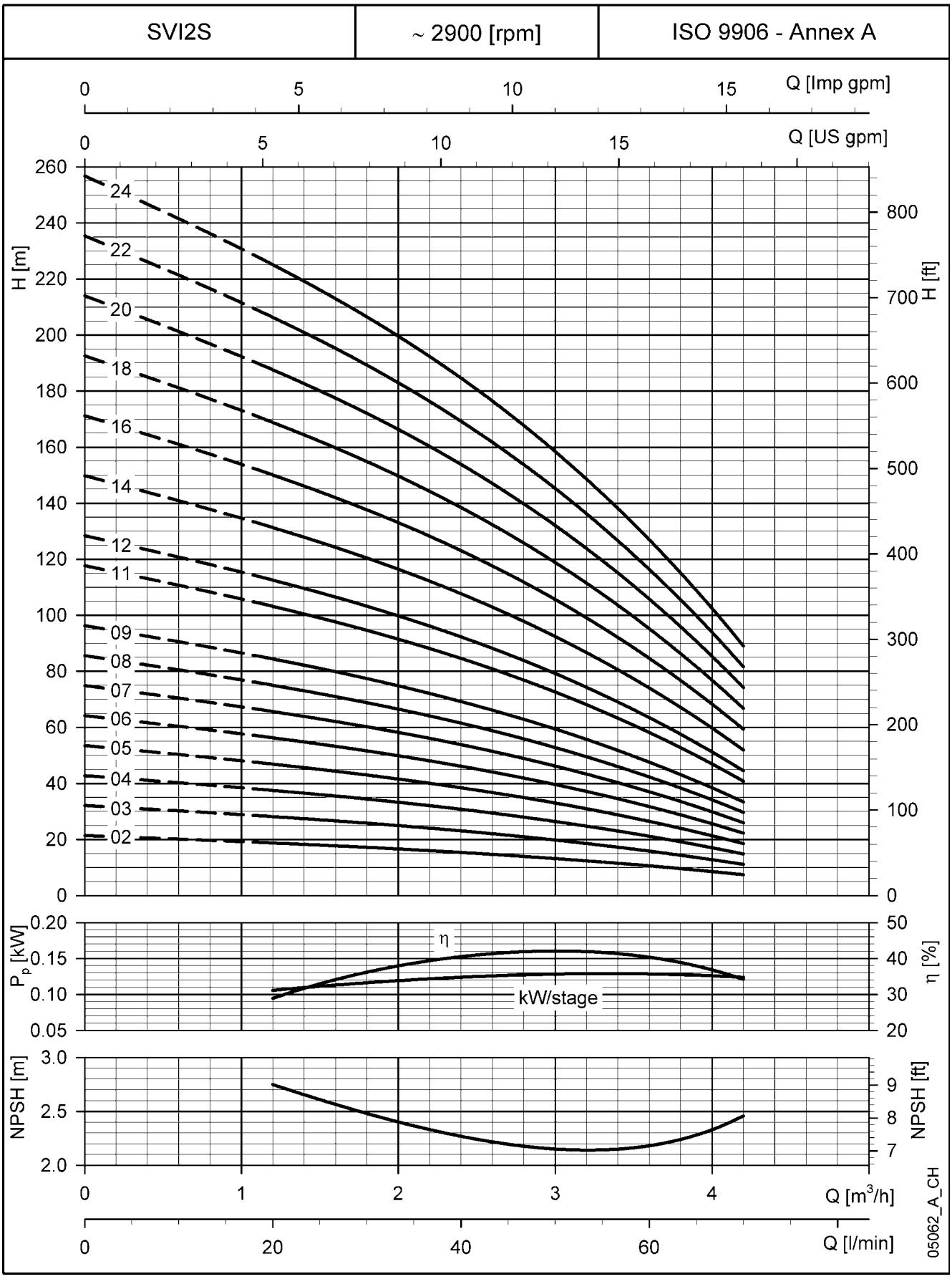

These performances are valid for liquids with density ρ = 1.0 Kg/dm³ and kinematic viscosity ν = 1 mm²/sec.

SVI 4 (S, N) SERIES
DIMENSIONS AND WEIGHTS AT 50 Hz, 2 POLES

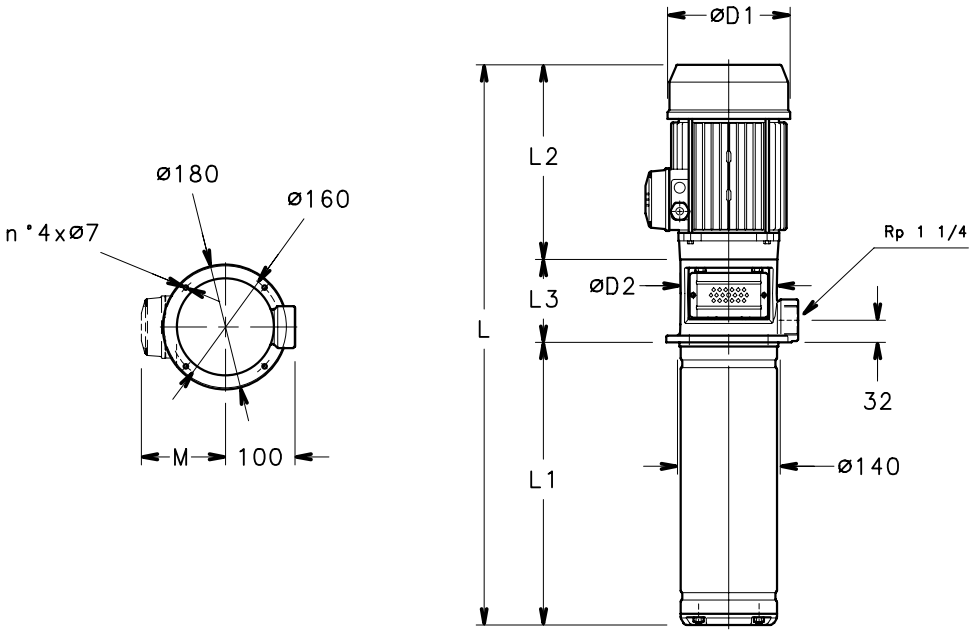

PUMP TYPE	MOTOR		DIMENSIONS (mm)							ELECTRIC PUMP WEIGHT
	kW	SIZE	L	L1	L2	L3	M	D1	D2	kg
SVI402/02S03T/A	0,37	71	416	107	209	100	111	120	105	14
SVI403/03S05T/A	0,55	71	463	132	231	100	111	140	105	14
SVI404/04S07T/D	0,75	80	530	157	263	110	129	155	120	19
SVI405/05S11T/D	1,1	80	555	182	263	110	129	155	120	20
SVI406/06S11T/D	1,1	80	580	207	263	110	129	155	120	20
SVI407/07S11T/D	1,1	80	604	231	263	110	129	155	120	21
SVI408/08S15T/D	1,5	90	639	256	263	120	129	155	140	25
SVI409/09S15T/D	1,5	90	664	281	263	120	129	155	140	25
SVI411/11S22T/C	2,2	90	749	331	298	120	134	174	140	31
SVI413/13S22T/C	2,2	90	799	381	298	120	134	174	140	32
SVI414/14S30T/P	3	100	834	406	298	130	134	174	160	35
SVI416/16S30T/P	3	100	884	456	298	130	134	174	160	35
SVI418/18S30T/P	3	100	934	506	298	130	134	174	160	35
SVI420/20S40T/P	4	112	1005	556	319	130	154	197	160	51
SVI422/22S40T/P	4	112	1055	606	319	130	154	197	160	51
SVI424/24S40T/P	4	112	1105	656	319	130	154	197	160	52

svi4s-2p50-en_d_td

	PUMP TYPE	MOTOR		DIMENS. L2+L3	NUMBER OF STAGES																
					2	3	4	5	6	7	8	9	11	12	13	14	15	16	18	20	22	24
		kW	SIZE	mm	L1 Shank increased lengths (AVAILABLE ON REQUEST *)																
NUMBER OF IMPELLERS	SVI402/..	0,37	71	309	107	132	157	182	207	231	256	281	331	356	381	406	431	456	506	556	606	656
	SVI403/..	0,55	71	331		132	157	182	207	231	256	281	331	356	381	406	431	456	506	556	606	656
	SVI404/..	0,75	80	373			157	182	207	231	256	281	331	356	381	406	431	456	506	556	606	656
	SVI405/..	1,1	80	373				182	207	231	256	281	331	356	381	406	431	456	506	556	606	656
	SVI406/..	1,1	80	373					207	231	256	281	331	356	381	406	431	456	506	556	606	656
	SVI407/..	1,1	80	373						231	256	281	331	356	381	406	431	456	506	556	606	656
	SVI408/..	1,5	90	383							256	281	331	356	381	406	431	456	506	556	606	656
	SVI409/..	1,5	90	383								281	331	356	381	406	431	456	506	556	606	656
	SVI411/..	2,2	90	418									331	356	381	406	431	456	506	556	606	656
	SVI413/..	2,2	90	418											381	406	431	456	506	556	606	656
	SVI414/..	3	100	428												406	431	456	506	556	606	656
	SVI416/..	3	100	428														456	506	556	606	656
	SVI418/..	3	100	428															506	556	606	656
	SVI420/..	4	112	449																556	606	656
	SVI422/..	4	112	449																	606	656
	SVI424/..	4	112	449																		656

L1 Standard

* The hydraulic performances of the electric pumps with shank increased lenghts can be lower than standard version.

svi4s-en_d_tcm

LOWARA
a xylem brand

SVI 4 (S, N) SERIES
OPERATING CHARACTERISTICS AT 50 Hz, 2 POLES

SVI4S	~ 2900 [rpm]	ISO 9906 - Annex A

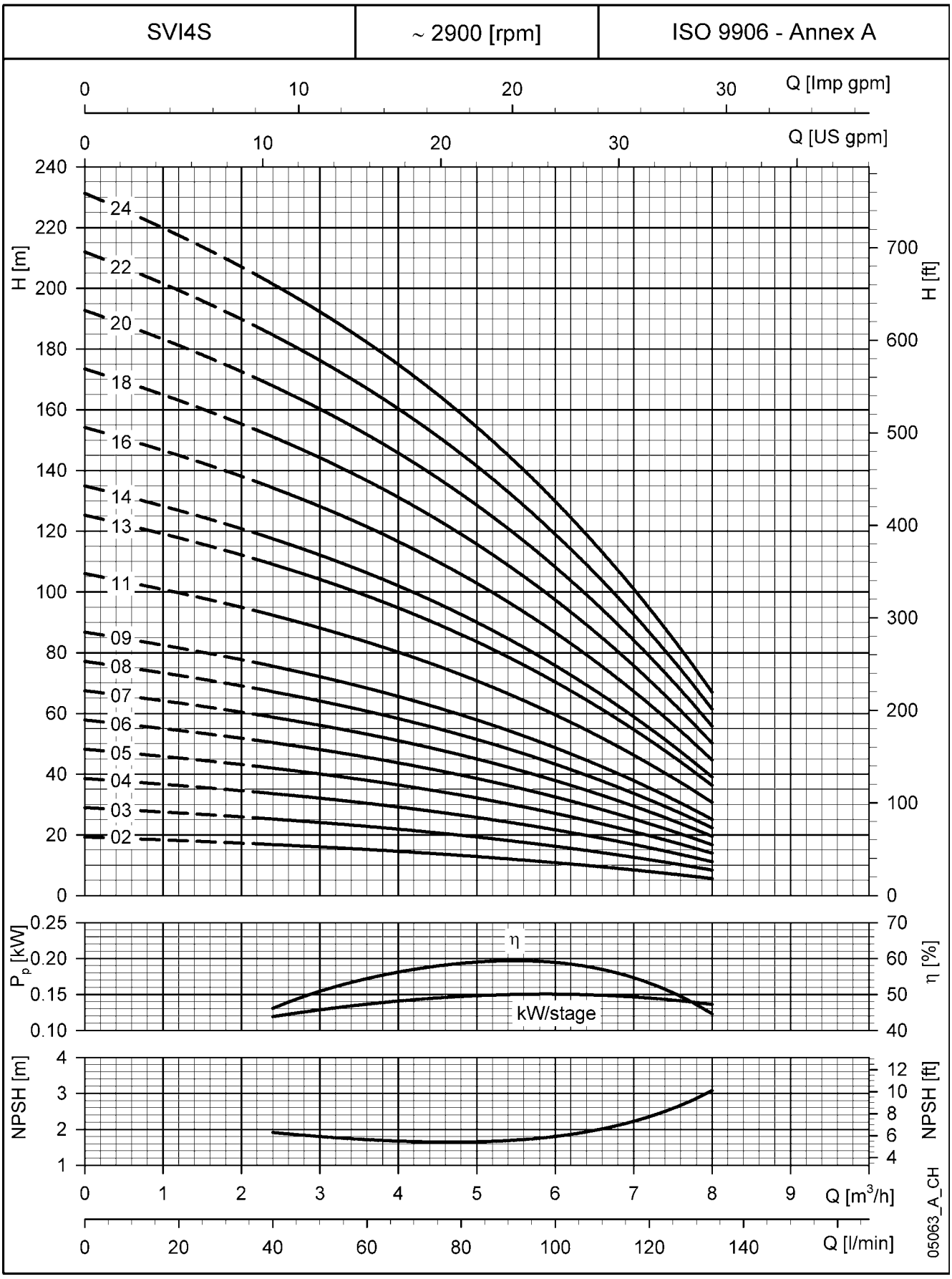

These performances are valid for liquids with density ρ = 1.0 Kg/dm³ and kinematic viscosity ν = 1 mm²/sec.

SVI 8 (S, N) SERIES
DIMENSIONS AND WEIGHTS AT 50 Hz, 2 POLES

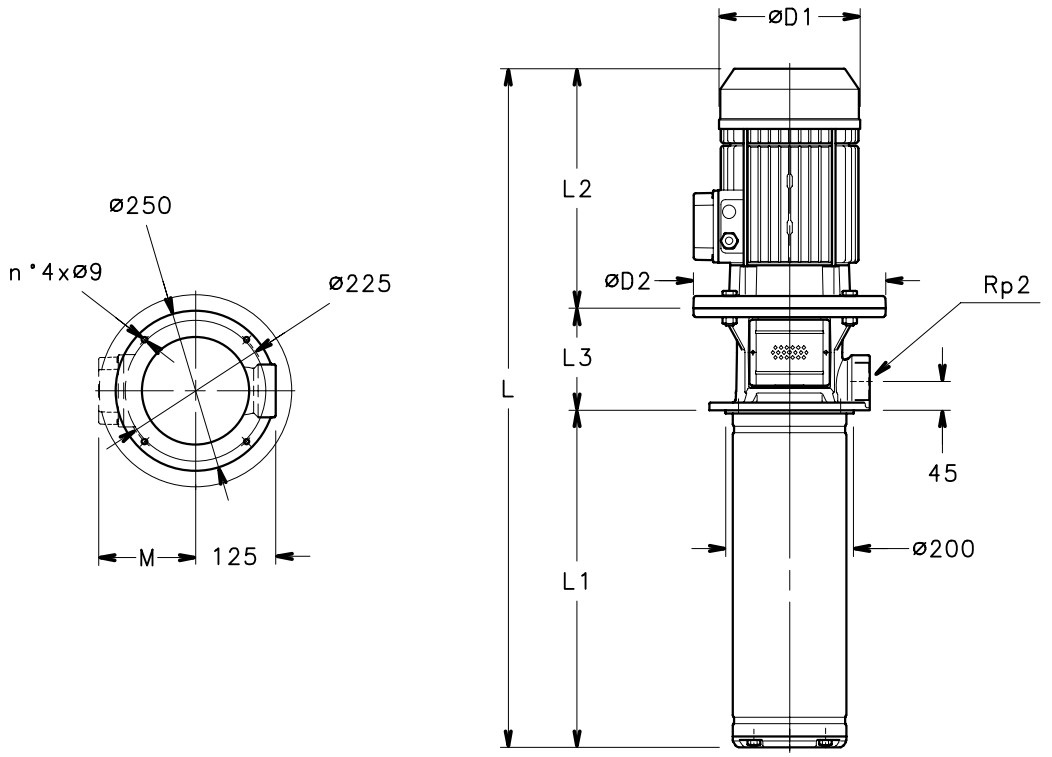

PUMP TYPE	MOTOR		DIMENSIONS (mm)							ELECTRIC PUMP WEIGHT
	kW	SIZE	L	L1	L2	L3	M	D1	D2	kg
SVI801/02S07T/D	0,75	80	528	146	263	119	129	155	120	24
SVI802/02S11T/D	1,1	80	528	146	263	119	129	155	120	25
SVI803/03S15T/D	1,5	90	576	184	263	129	129	155	140	29
SVI804/04S22T/C	2,2	90	649	222	298	129	134	174	140	35
SVI805/05S22T/C	2,2	90	687	260	298	129	134	174	140	36
SVI806/06S30T/P	3	100	735	298	298	139	134	174	160	40
SVI808/08S40T/P	4	112	832	374	319	139	154	197	160	57
SVI809/09S40T/P	4	112	870	412	319	139	154	197	160	58
SVI811/11S55T/P	5,5	132	1022	488	375	159	168	214	300	69
SVI812/12S55T/P	5,5	132	1060	526	375	159	168	214	300	70
SVI814/14S75T/P	7,5	132	1128	602	367	159	191	256	300	88
SVI816/16S75T/P	7,5	132	1204	678	367	159	191	256	300	89

svi8s-2p50-en_d_td

NUMBER OF IMPELLERS	PUMP TYPE	MOTOR		DIMENS. L2+L3	NUMBER OF STAGES													
		kW	SIZE	mm	2	3	4	5	6	7	8	9	10	11	12	14	15	16
					L1 Shank increased lengths (AVAILABLE ON REQUEST *)													
	SVI801/..	0,75	80	382	146	184	222	260	298	336	374	412	450	488	526	602	640	678
	SVI802/..	1,1	80	382	146	184	222	260	298	336	374	412	450	488	526	602	640	678
	SVI803/..	1,5	90	392		184	222	260	298	336	374	412	450	488	526	602	640	678
	SVI804/..	2,2	90	427			222	260	298	336	374	412	450	488	526	602	640	678
	SVI805/..	2,2	90	427				260	298	336	374	412	450	488	526	602	640	678
	SVI806/..	3	100	437					298	336	374	412	450	488	526	602	640	678
	SVI808/..	4	112	458							374	412	450	488	526	602	640	678
	SVI809/..	4	112	458			L1 Standard					412	450	488	526	602	640	678
	SVI811/..	5,5	132	534										488	526	602	640	678
	SVI812/..	5,5	132	534											526	602	640	678
	SVI814/..	7,5	132	526												602	640	678
	SVI816/..	7,5	132	526														678

* The hydraulic performances of the electric pumps with shank increased lenghts can be lower than standard version.

svi8s-en_d_tcm

LOWARA
a xylem brand

SVI 8 (S, N) SERIES
OPERATING CHARACTERISTICS AT 50 Hz, 2 POLES

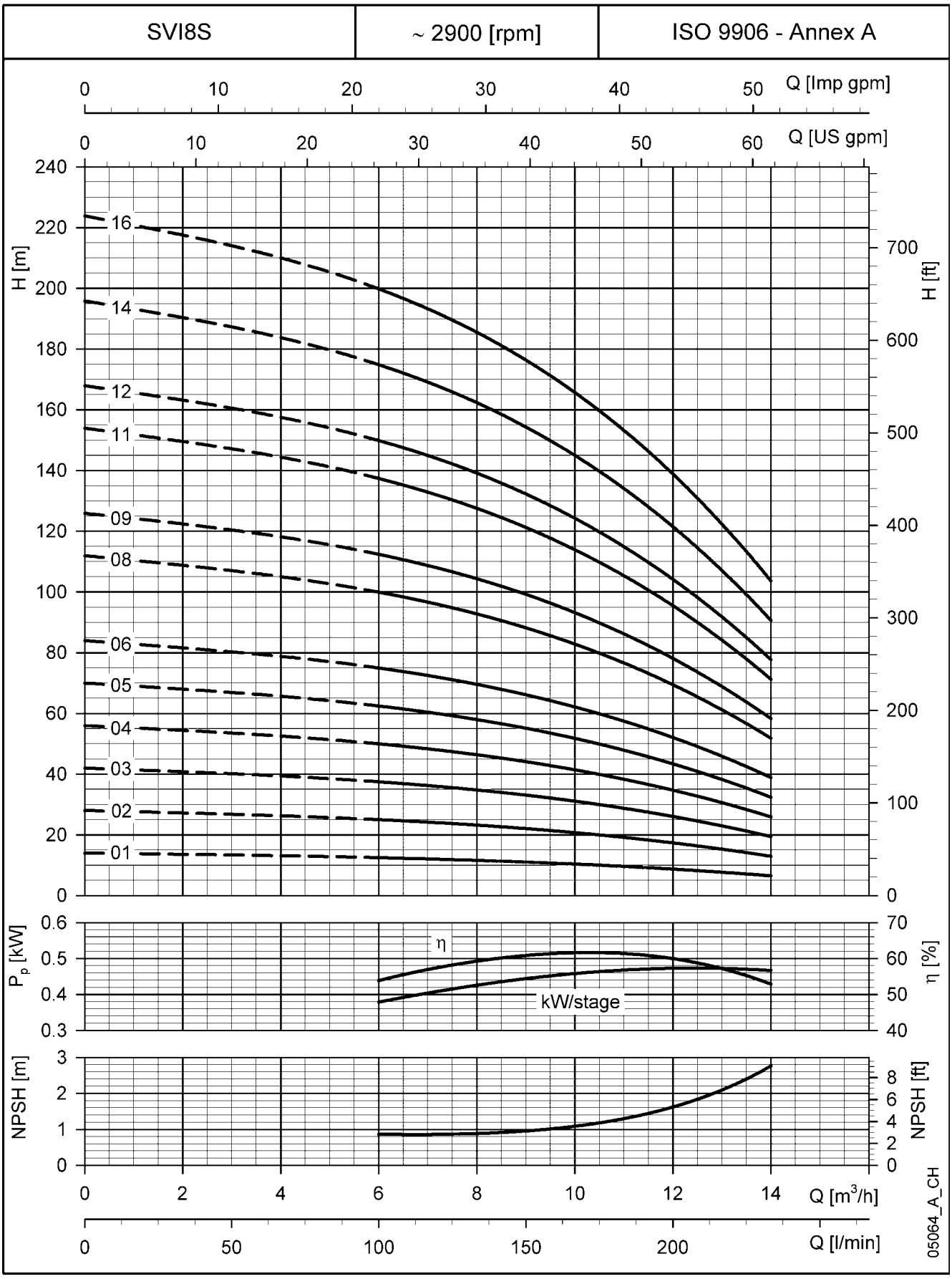

These performances are valid for liquids with density ρ = 1.0 Kg/dm³ and kinematic viscosity ν = 1 mm²/sec.

LOWARA
a xylem brand

SVI 16 (S, N) SERIES
DIMENSIONS AND WEIGHTS AT 50 Hz, 2 POLES

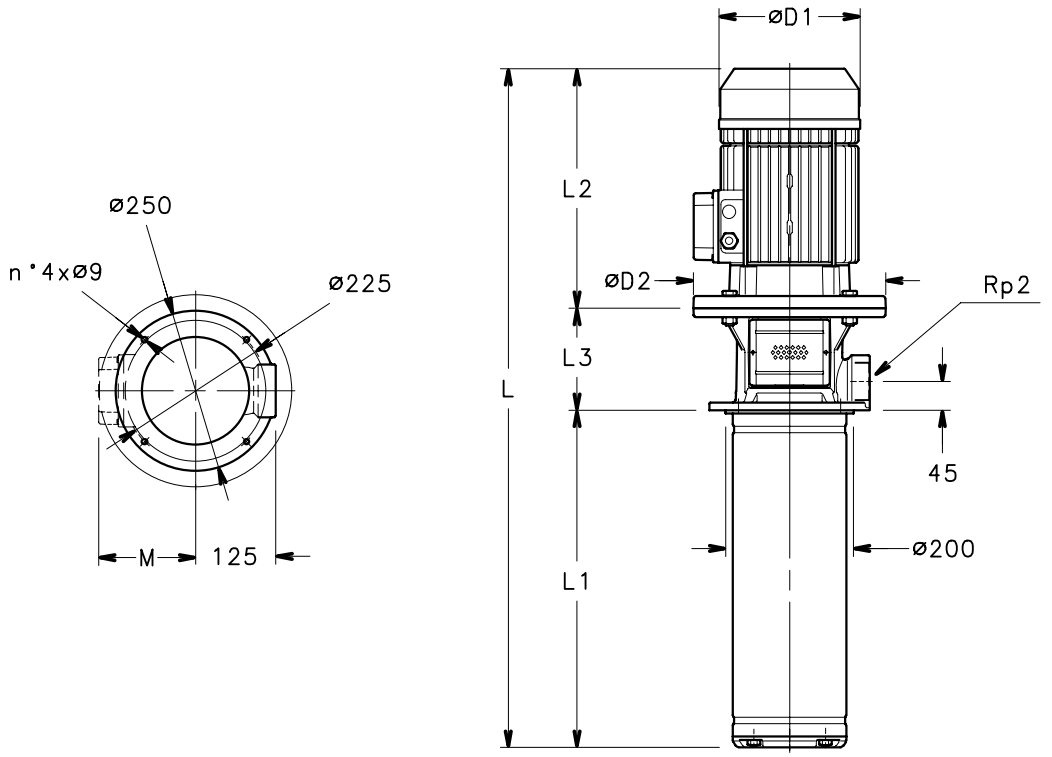

PUMP TYPE	MOTOR		DIMENSIONS (mm)							ELECTRIC PUMP WEIGHT
	kW	SIZE	L	L1	L2	L3	M	D1	D2	kg
SVI1601/02S11T/D	1,1	80	528	146	263	119	129	155	120	27
SVI1602/02S22T/C	2,2	90	573	146	298	129	134	174	140	35
SVI1603/03S30T/P	3	100	621	184	298	139	134	174	160	39
SVI1604/04S40T/P	4	112	680	222	319	139	154	197	160	57
SVI1605/05S55T/P	5,5	132	794	260	375	159	168	214	300	67
SVI1606/06S55T/P	5,5	132	832	298	375	159	168	214	300	68
SVI1607/07S75T/P	7,5	132	862	336	367	159	191	256	300	85
SVI1608/08S75T/P	7,5	132	900	374	367	159	191	256	300	86
SVI1610/10S110T/P	11	160	1069	450	428	191	191	256	350	119
SVI1612/12S110T/P	11	160	1145	526	428	191	191	256	350	121
SVI1614/14S150T/P	15	160	1287	602	494	191	240	313	350	130
SVI1615/15S150T/P	15	160	1325	640	494	191	240	313	350	131

svi16s-2p50-en_d_td

	PUMP TYPE	MOTOR		DIMENS. L2+L3	NUMBER OF STAGES													
		kW	SIZE	mm	2	3	4	5	6	7	8	9	10	11	12	14	15	16
					L1 Shank increased lengths (AVAILABLE ON REQUEST *)													
NUMBER OF IMPELLERS	SVI1601/..	1,1	80	382	146	184	222	260	298	336	374	412	450	488	526	602	640	678
	SVI1602/..	2,2	90	427	146	184	222	260	298	336	374	412	450	488	526	602	640	678
	SVI1603/..	3	100	437		184	222	260	298	336	374	412	450	488	526	602	640	678
	SVI1604/..	4	112	458			222	260	298	336	374	412	450	488	526	602	640	678
	SVI1605/..	5,5	132	534				260	298	336	374	412	450	488	526	602	640	678
	SVI1606/..	5,5	132	534					298	336	374	412	450	488	526	602	640	678
	SVI1607/..	7,5	132	526						336	374	412	450	488	526	602	640	678
	SVI1608/..	7,5	132	526			L1 Standard				374	412	450	488	526	602	640	678
	SVI1610/..	11	160	619									450	488	526	602	640	678
	SVI1612/..	11	160	619											526	602	640	678
	SVI1614/..	15	160	685												602	640	678
	SVI1615/..	15	160	685													640	678

* The hydraulic performances of the electric pumps with shank increased lenghts can be lower than standard version.

svi16s-en_c_tcm

LOWARA
a xylem brand

SVI 16 (S, N) SERIES
OPERATING CHARACTERISTICS AT 50 Hz, 2 POLES

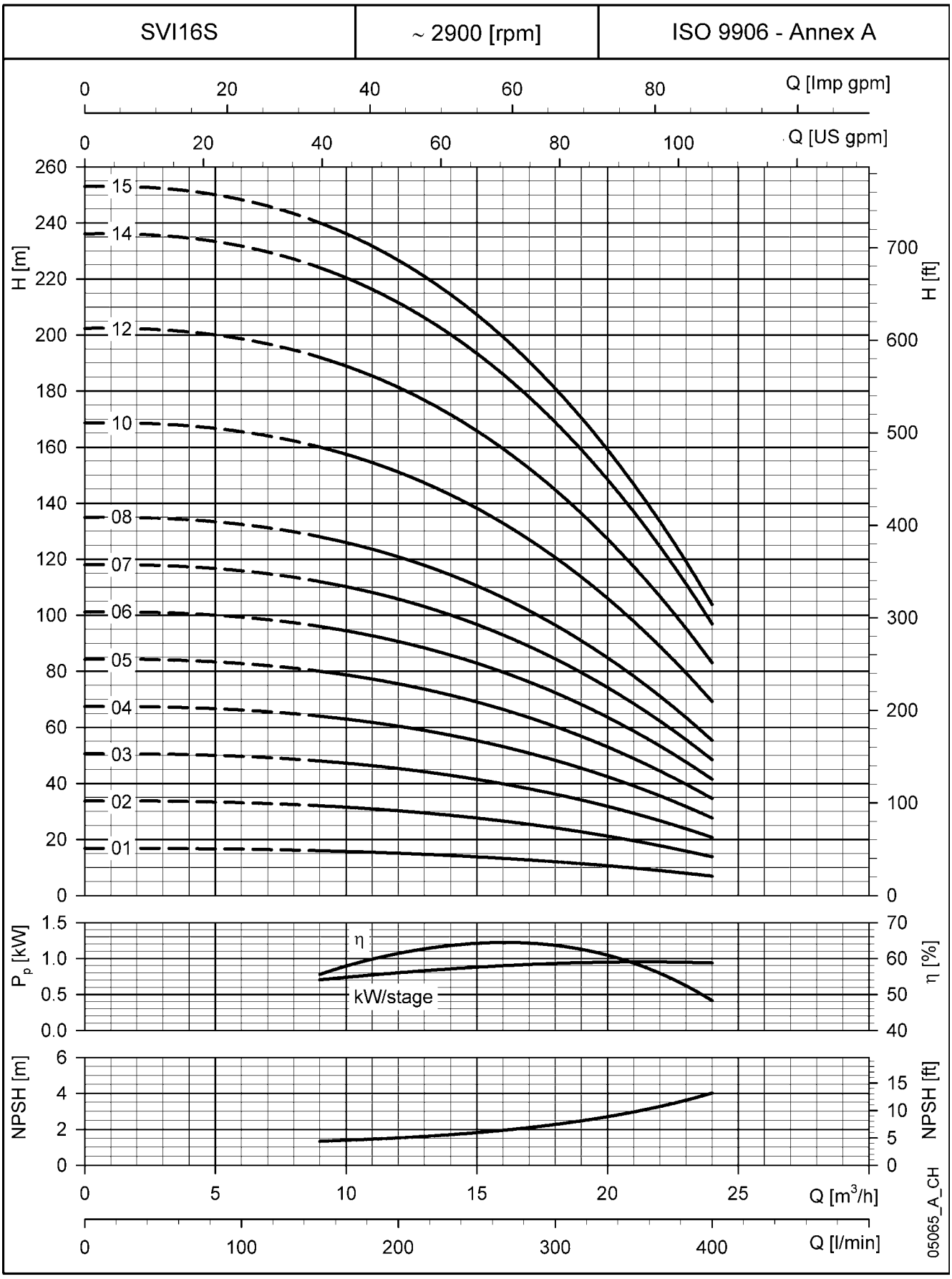

These performances are valid for liquids with density ρ = 1.0 Kg/dm³ and kinematic viscosity ν = 1 mm²/sec.

LOWARA
a xylem brand

SVI 33 (S, N) SERIES
DIMENSIONS AND WEIGHTS AT 50 Hz, 2 POLES

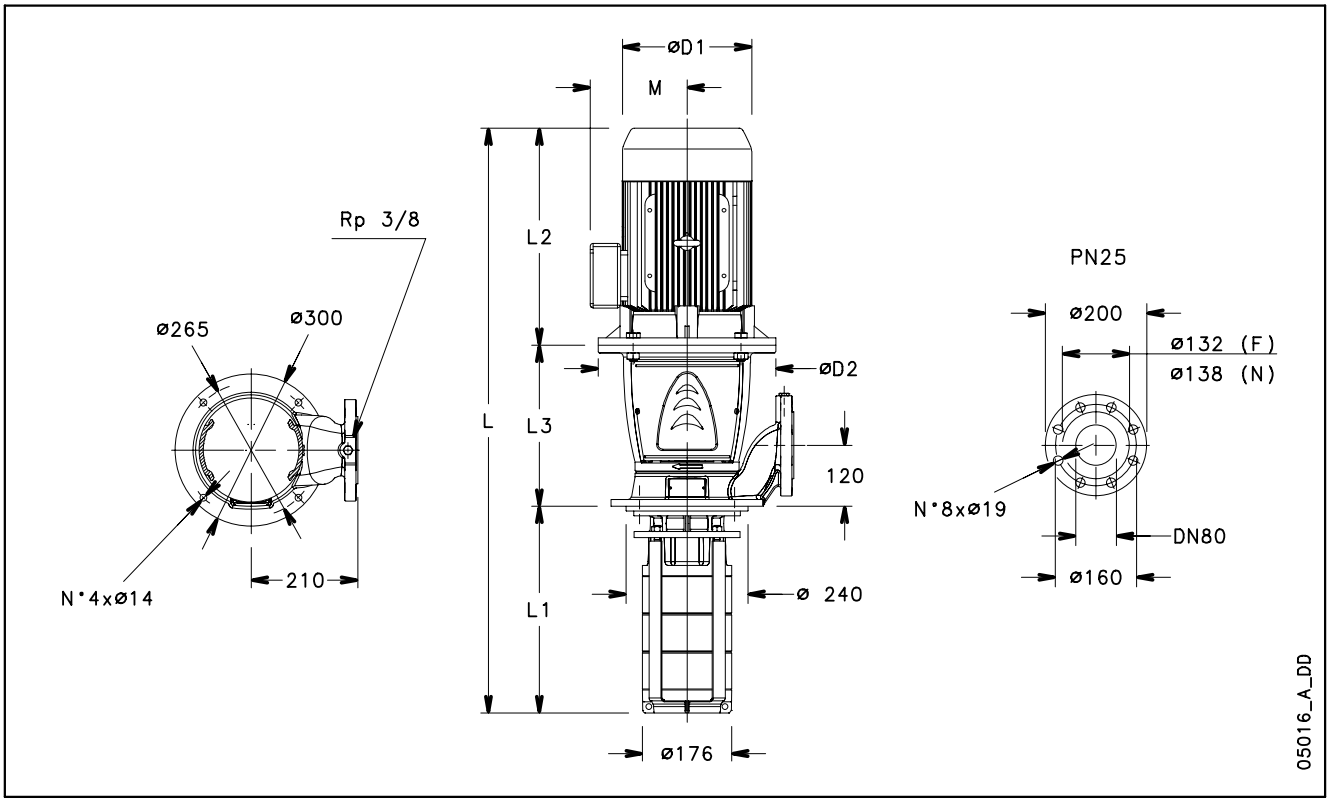

PUMP TYPE	MOTOR		DIMENSIONS (mm)							ELECTRIC PUMP WEIGHT
	kW	SIZE	L	L1	L2	L3	M	D1	D2	kg
SVI3301/1-01S22T/C	2,2	90	817	257	298	262	134	174	140	56
SVI3301-01S30T/P	3	100	817	257	298	262	134	174	160	64
SVI3302/2-02S40T/P	4	112	913	332	319	262	154	197	160	70
SVI3302/1-02S40T/P	4	112	913	332	319	262	154	197	160	70
SVI3303/2-03S55T/P	5,5	132	1064	407	375	282	168	214	300	88
SVI3303-03S75T/P	7,5	132	1056	407	367	282	191	256	300	107
SVI3304-04S110T/P	11	160	1227	482	428	317	191	256	350	128
SVI3305/1-05S110T/P	11	160	1302	557	428	317	191	256	350	130
SVI3306/2-06S150T/P	15	160	1443	632	494	317	240	313	350	165
SVI3307/2-07S150T/P	15	160	1518	707	494	317	240	313	350	168
SVI3307-07S185T/P	18,5	160	1518	707	494	317	240	313	350	176
SVI3308/1-08S185T/P	18,5	160	1593	782	494	317	240	313	350	179
SVI3309/1-09S220T/P	22	180	1668	857	494	317	240	313	350	193
SVI3310/2-10S220T/P	22	180	1743	932	494	317	240	313	350	196
SVI3310-10S300T/C	30	200	1906	932	657	317	317	402	400	303

svi33s-2p50-en_c_td

	PUMP TYPE	MOTOR		DIMENS. L2+L3	NUMBER OF STAGES											
					1	2	3	4	5	6	7	8	9	10	11	12
		kW	SIZE	mm	L1 Shank increased lengths (AVAILABLE ON REQUEST *)											
NUMBER OF IMPELLERS	SVI3301/1-..	2,2	90	560	257	332	407	482	557	632	707	782	857	932	1007	1082
	SVI3301-..	3	100	560	257	332	407	482	557	632	707	782	857	932	1007	1082
	SVI3302/2-..	4	112	581		332	407	482	557	632	707	782	857	932	1007	1082
	SVI3302/1-..	4	112	581		332	407	482	557	632	707	782	857	932	1007	1082
	SVI3303/2-..	5,5	132	657			407	482	557	632	707	782	857	932	1007	1082
	SVI3303-..	7,5	132	649			407	482	557	632	707	782	857	932	1007	1082
	SVI3304-..	11	160	745				482	557	632	707	782	857	932	1007	1082
	SVI3305/1-..	11	160	745					557	632	707	782	857	932	1007	1082
	SVI3306/2-..	15	160	811						632	707	782	857	932	1007	1082
	SVI3307/2-..	15	160	811		L1 Standard					707	782	857	932	1007	1082
	SVI3307-..	18,5	160	811							707	782	857	932	1007	1082
	SVI3308/1-..	18,5	160	811								782	857	932	1007	1082
	SVI3309/1-..	22	180	811									857	932	1007	1082
	SVI3310/2-..	22	180	811										932	1007	1082
	SVI3310-..	30	200	974										932	1007	1082

* The hydraulic performances of the electric pumps with shank increased lenghts can be lower than standard version.

svi33s-en_c_tcm

LOWARA
a xylem brand

SVI 33 (S, N) SERIES
OPERATING CHARACTERISTICS AT 50 Hz, 2 POLES

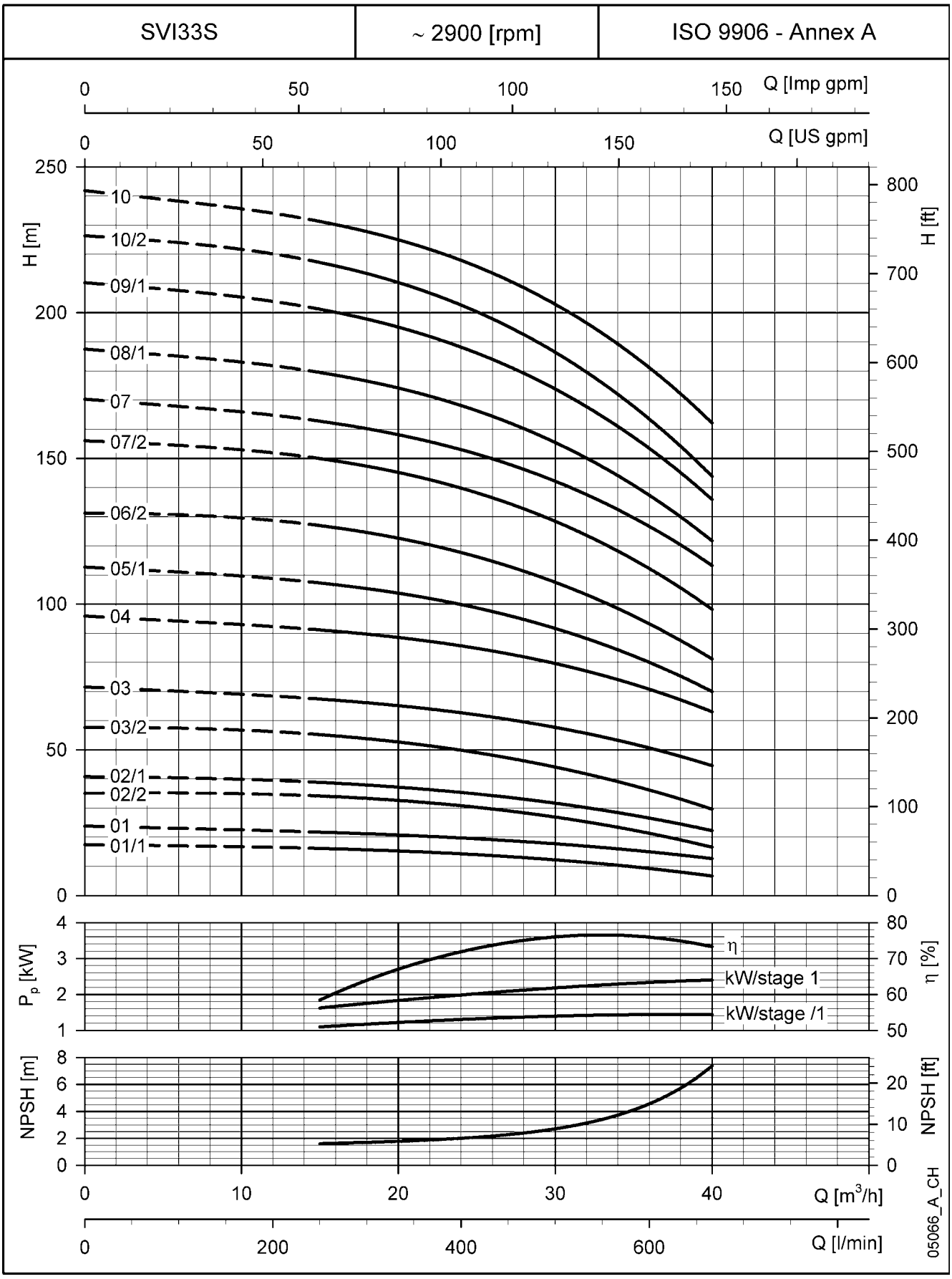

These performances are valid for liquids with density ρ = 1.0 Kg/dm³ and kinematic viscosity ν = 1 mm²/sec.

SVI 46 (S, N) SERIES
DIMENSIONS AND WEIGHTS AT 50 Hz, 2 POLES

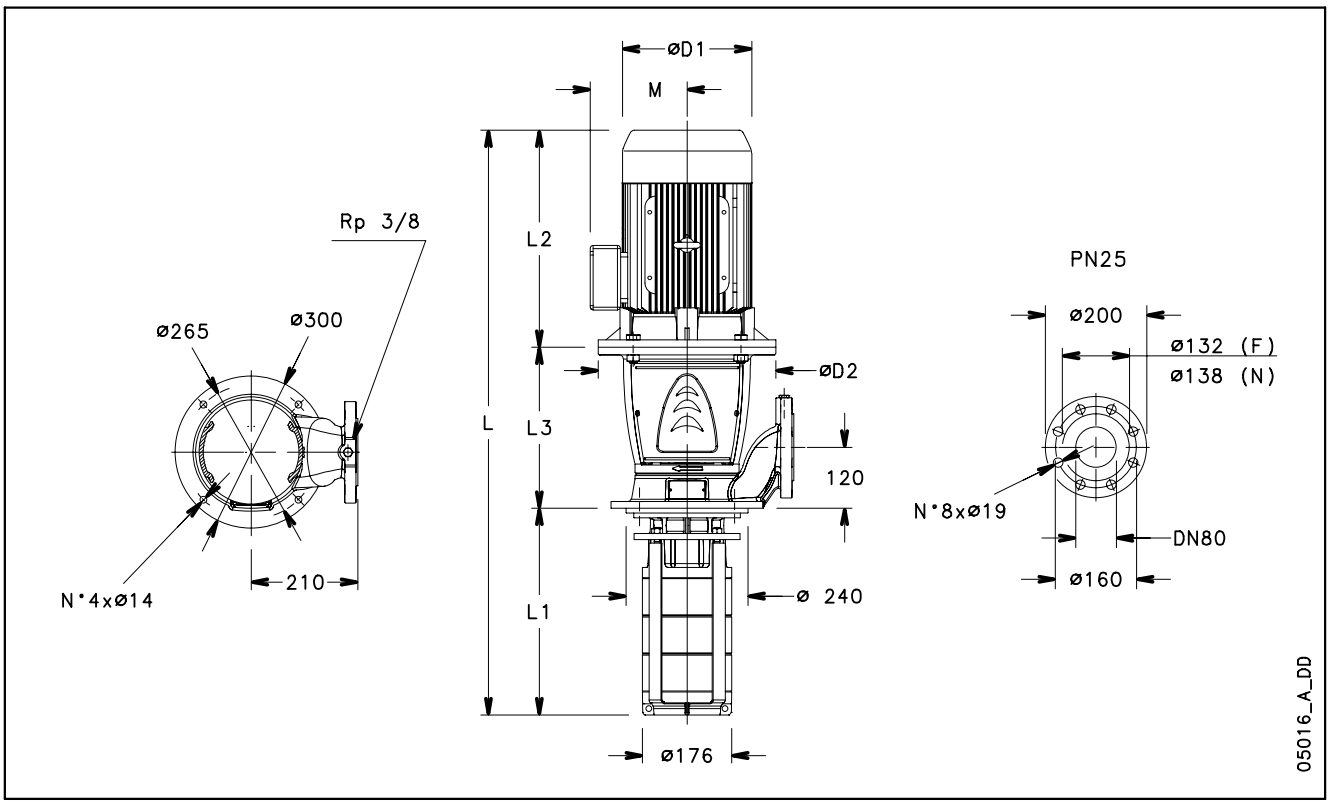

PUMP TYPE	MOTOR		DIMENSIONS (mm)							ELECTRIC PUMP WEIGHT
	kW	SIZE	L	L1	L2	L3	M	D1	D2	kg
SVI4601/1-01S30T/P	3	100	817	257	298	262	134	174	160	64
SVI4601-01S40T/P	4	112	838	257	319	262	154	197	160	67
SVI4602/2-02S55T/P	5,5	132	989	332	375	282	168	214	300	85
SVI4602-02S75T/P	7,5	132	981	332	367	282	191	256	300	104
SVI4603-03S110T/P	11	160	1152	407	428	317	191	256	350	125
SVI4604/2-04S150T/P	15	160	1293	482	494	317	240	313	350	159
SVI4605-05S185T/P	18,5	160	1368	557	494	317	240	313	350	171
SVI4606-06S220T/P	22	180	1443	632	494	317	240	313	350	185
SVI4607/2-07S300T/C	30	200	1681	707	657	317	317	402	400	301
SVI4608/2-08S300T/C	30	200	1756	782	657	317	317	402	400	304
SVI4609/2-09S300T/C	30	200	1831	857	657	317	317	402	400	306

svi46s-2p50-en_c_td

	PUMP TYPE	MOTOR		DIMENS. L2+L3 mm	NUMBER OF STAGES											
					1	2	3	4	5	6	7	8	9	10	11	12
		kW	SIZE		L1 Shank increased lengths (AVAILABLE ON REQUEST *)											
NUMBER OF IMPELLERS	SVI4601/1-..	3	100	560	257	332	407	482	557	632	707	782	857	932	1007	1082
	SVI4601-..	4	112	581	257	332	407	482	557	632	707	782	857	932	1007	1082
	SVI4602/2-..	5,5	132	657		332	407	482	557	632	707	782	857	932	1007	1082
	SVI4602-..	7,5	132	649		332	407	482	557	632	707	782	857	932	1007	1082
	SVI4603-..	11	160	745			407	482	557	632	707	782	857	932	1007	1082
	SVI4604/2-..	15	160	811				482	557	632	707	782	857	932	1007	1082
	SVI4605-..	18,5	160	811					557	632	707	782	857	932	1007	1082
	SVI4606-..	22	180	811			L1 Standard			632	707	782	857	932	1007	1082
	SVI4607/2-..	30	200	974							707	782	857	932	1007	1082
	SVI4608/2-..	30	200	974								782	857	932	1007	1082
	SVI4609/2-..	30	200	974									857	932	1007	1082

* The hydraulic performances of the electric pumps with shank increased lenghts can be lower than standard version.

svi46s-en_c_tcm

LOWARA
a xylem brand

SVI 46 (S, N) SERIES
OPERATING CHARACTERISTICS AT 50 Hz, 2 POLES

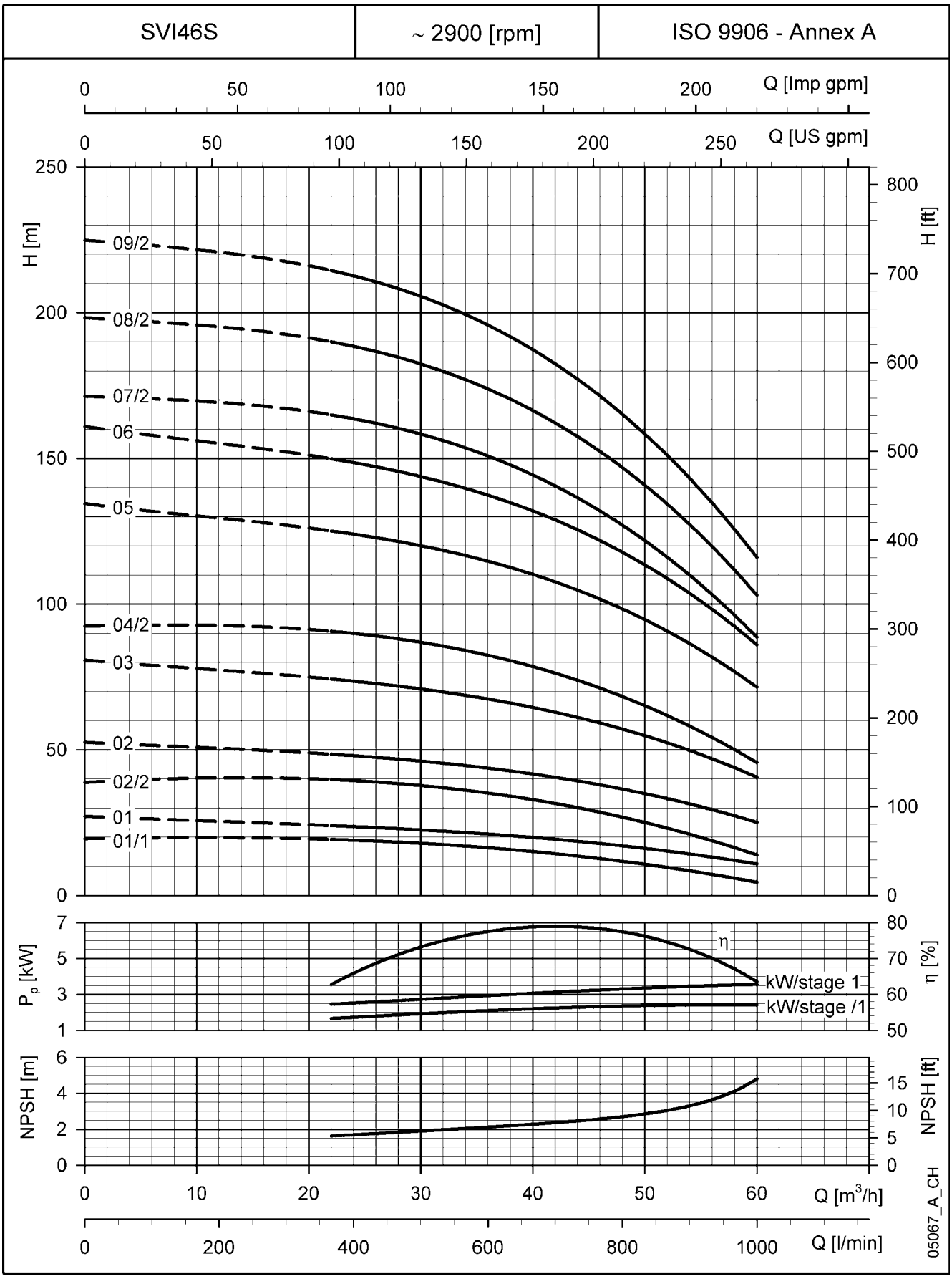

These performances are valid for liquids with density ρ = 1.0 Kg/dm³ and kinematic viscosity ν = 1 mm²/sec.

SVI 66 (S, N) SERIES
DIMENSIONS AND WEIGHTS AT 50 Hz, 2 POLES

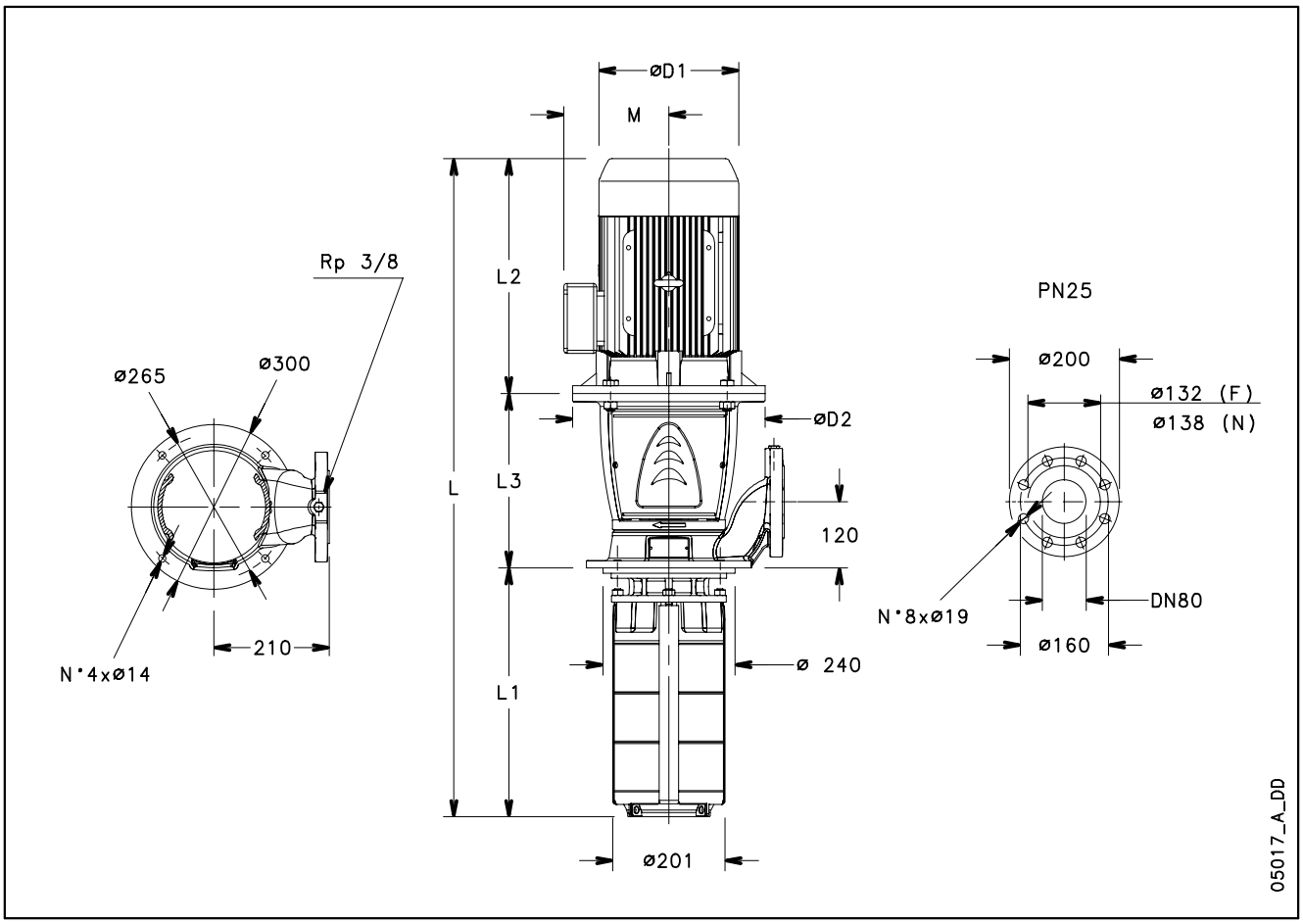

PUMP TYPE	MOTOR		DIMENSIONS (mm)							ELECTRIC PUMP WEIGHT
	kW	SIZE	L	L1	L2	L3	M	D1	D2	kg
SVI6601/1-01S40T/P	4	112	853	272	319	262	154	197	160	73
SVI6601-01S55T/P	5,5	132	929	272	375	282	168	214	300	83
SVI6602/2-02S75T/P	7,5	132	1011	362	367	282	191	256	300	109
SVI6602-02S110T/P	11	160	1107	362	428	317	191	256	350	124
SVI6603/2-03S150T/P	15	160	1263	452	494	317	240	313	350	159
SVI6603-03S185T/P	18,5	160	1263	452	494	317	240	313	350	160
SVI6604/1-04S220T/P	22	180	1353	542	494	317	240	313	350	190
SVI6605/1-05S300T/C	30	200	1606	632	657	317	317	402	400	299

svi66s-2p50-en_c_td

	PUMP TYPE	MOTOR		DIMENS. L2+L3 mm	NUMBER OF STAGES									
		kW	SIZE		1	2	3	4	5	6	7	8	9	10
					L1 Shank increased lengths (AVAILABLE ON REQUEST *)									
NUMBER OF IMPELLERS	SVI6601/1-..	4	112	581	272	362	452	542	632	722	812	902	992	1082
	SVI6601-..	5,5	132	657	272	362	452	542	632	722	812	902	992	1082
	SVI6602/2-..	7,5	132	649		362	452	542	632	722	812	902	992	1082
	SVI6602-..	11	160	745		362	452	542	632	722	812	902	992	1082
	SVI6603/2-..	15	160	811			452	542	632	722	812	902	992	1082
	SVI6603-..	18,5	160	811	L1 Standard		452	542	632	722	812	902	992	1082
	SVI6604/1-..	22	180	811				542	632	722	812	902	992	1082
	SVI6605/1-..	30	200	974					632	722	812	902	992	1082

* The hydraulic performances of the electric pumps with shank increased lenghts can be lower than standard version.

svi66s-en_c_tcm

LOWARA
a xylem brand

SVI 66 (S, N) SERIES
OPERATING CHARACTERISTICS AT 50 Hz, 2 POLES

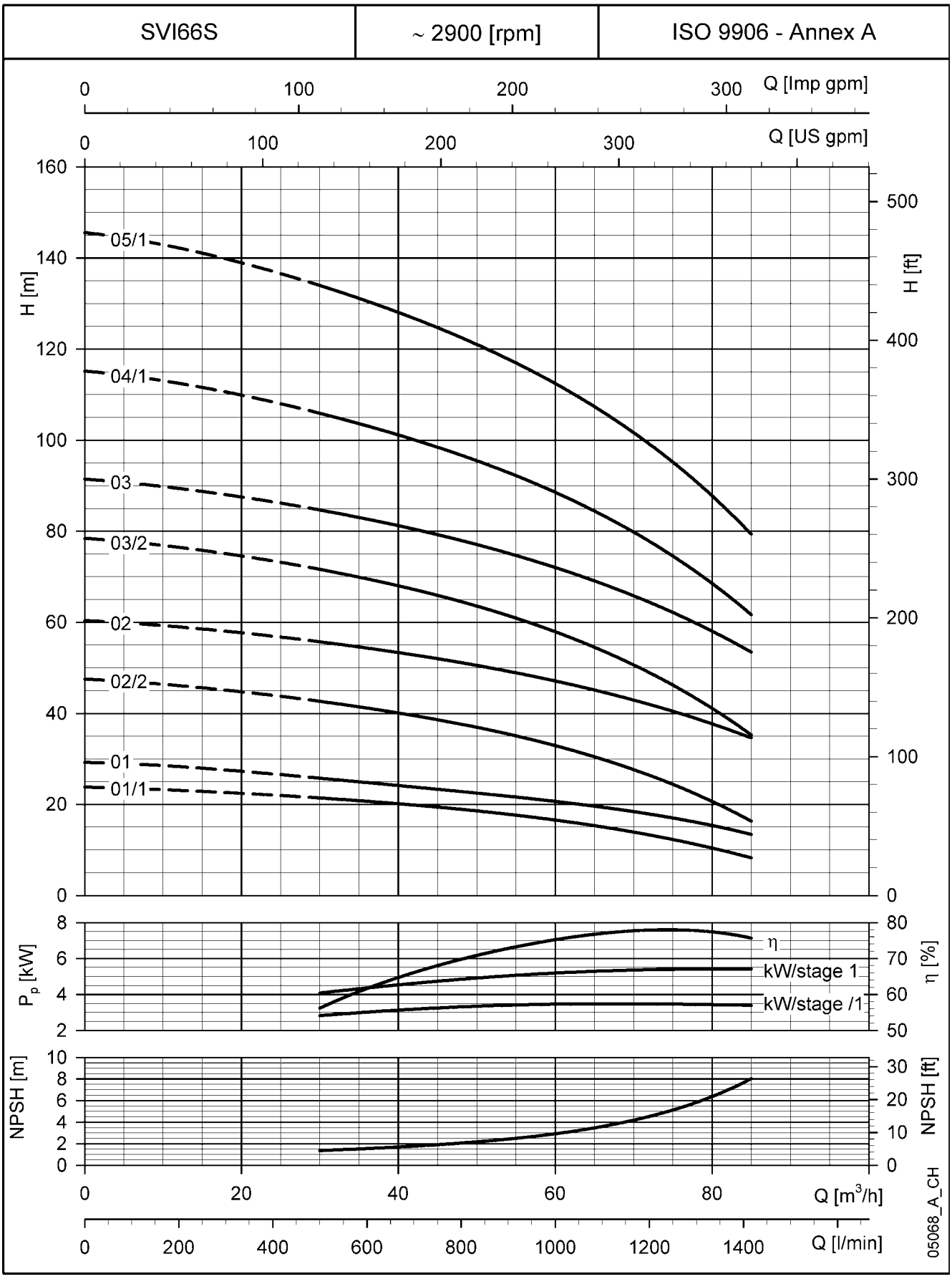

These performances are valid for liquids with density ρ = 1.0 Kg/dm³ and kinematic viscosity ν = 1 mm²/sec.

SVI 92 (S, N) SERIES
DIMENSIONS AND WEIGHTS AT 50 Hz, 2 POLES

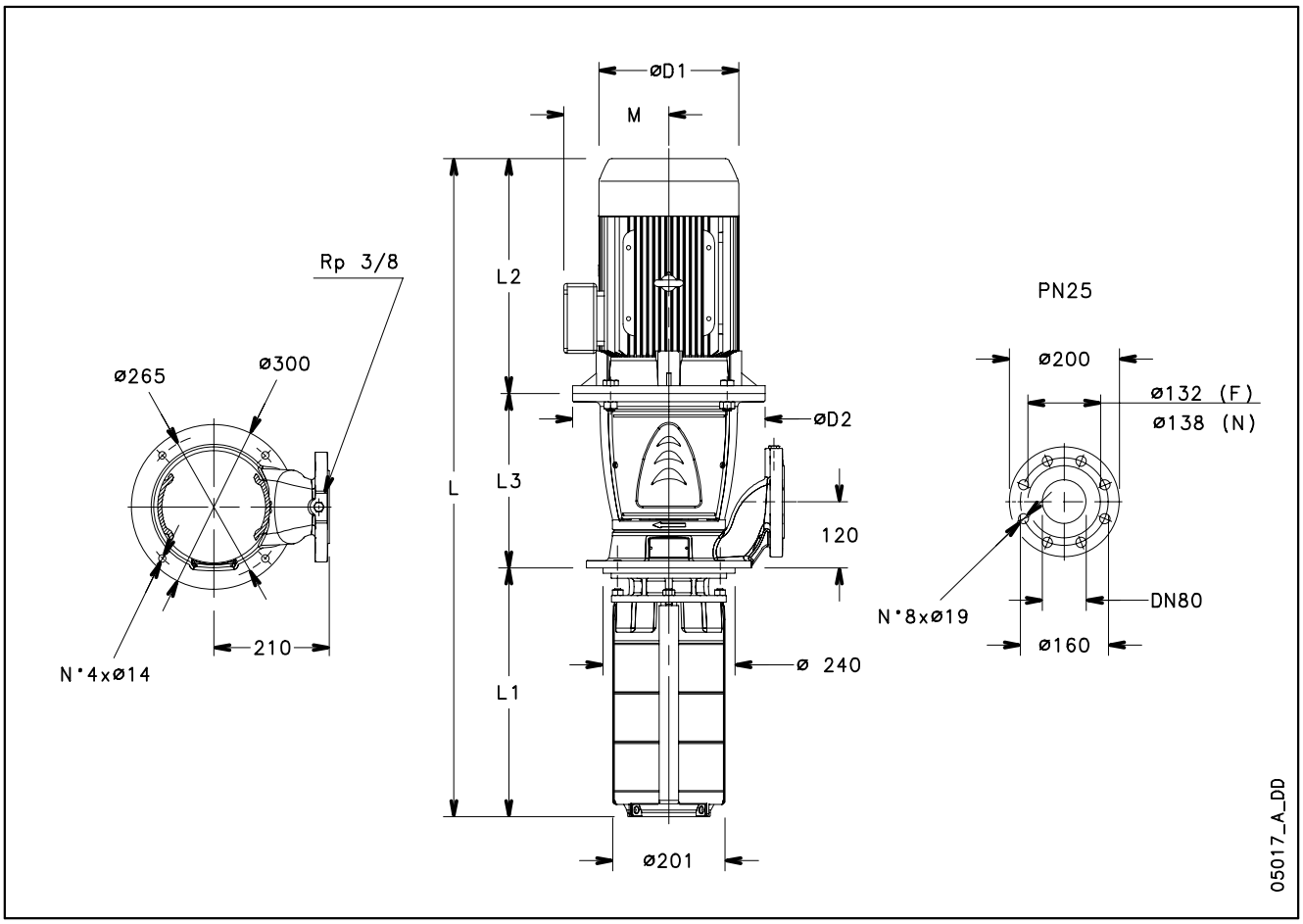

PUMP TYPE	MOTOR		DIMENSIONS (mm)							ELECTRIC PUMP WEIGHT
	kW	SIZE	L	L1	L2	L3	M	D1	D2	kg
SVI9201/1-01S55T/P	5,5	132	929	272	375	282	168	214	300	83
SVI9201-01S75T/P	7,5	132	921	272	367	282	191	256	300	101
SVI9202/2-02S110T/P	11	160	1107	362	428	317	191	256	350	123
SVI9202-02S150T/P	15	160	1173	362	494	317	240	313	350	155
SVI9203/2-03S185T/P	18,5	160	1263	452	494	317	240	313	350	167
SVI9203-03S220T/P	22	180	1263	452	494	317	240	313	350	179
SVI9204/2-04S300T/C	30	200	1516	542	657	317	317	402	400	296
SVI9204-04S300T/C	30	200	1516	542	657	317	317	402	400	296

svi92s-2p50-en_c_td

	PUMP TYPE	MOTOR		DIMENS. L2+L3 mm	NUMBER OF STAGES									
		kW	SIZE		1	2	3	4	5	6	7	8	9	10
					L1 Shank increased lengths (AVAILABLE ON REQUEST *)									
NUMBER OF IMPELLERS	SVI9201/1-..	5,5	132	657	272	362	452	542	632	722	812	902	992	1082
	SVI9201-..	7,5	132	649	272	362	452	542	632	722	812	902	992	1082
	SVI9202/2-..	11	160	745		362	452	542	632	722	812	902	992	1082
	SVI9202-..	15	160	811		362	452	542	632	722	812	902	992	1082
	SVI9203/2-..	18,5	160	811	L1 Standard		452	542	632	722	812	902	992	1082
	SVI9203-..	22	180	811			452	542	632	722	812	902	992	1082
	SVI9204/2-..	30	200	974				542	632	722	812	902	992	1082
	SVI9204-..	30	200	974				542	632	722	812	902	992	1082

* The hydraulic performances of the electric pumps with shank increased lenghts can be lower than standard version.

svi92s-en_c_tcm

LOWARA
a xylem brand

SVI 92 (S, N) SERIES
OPERATING CHARACTERISTICS AT 50 Hz, 2 POLES

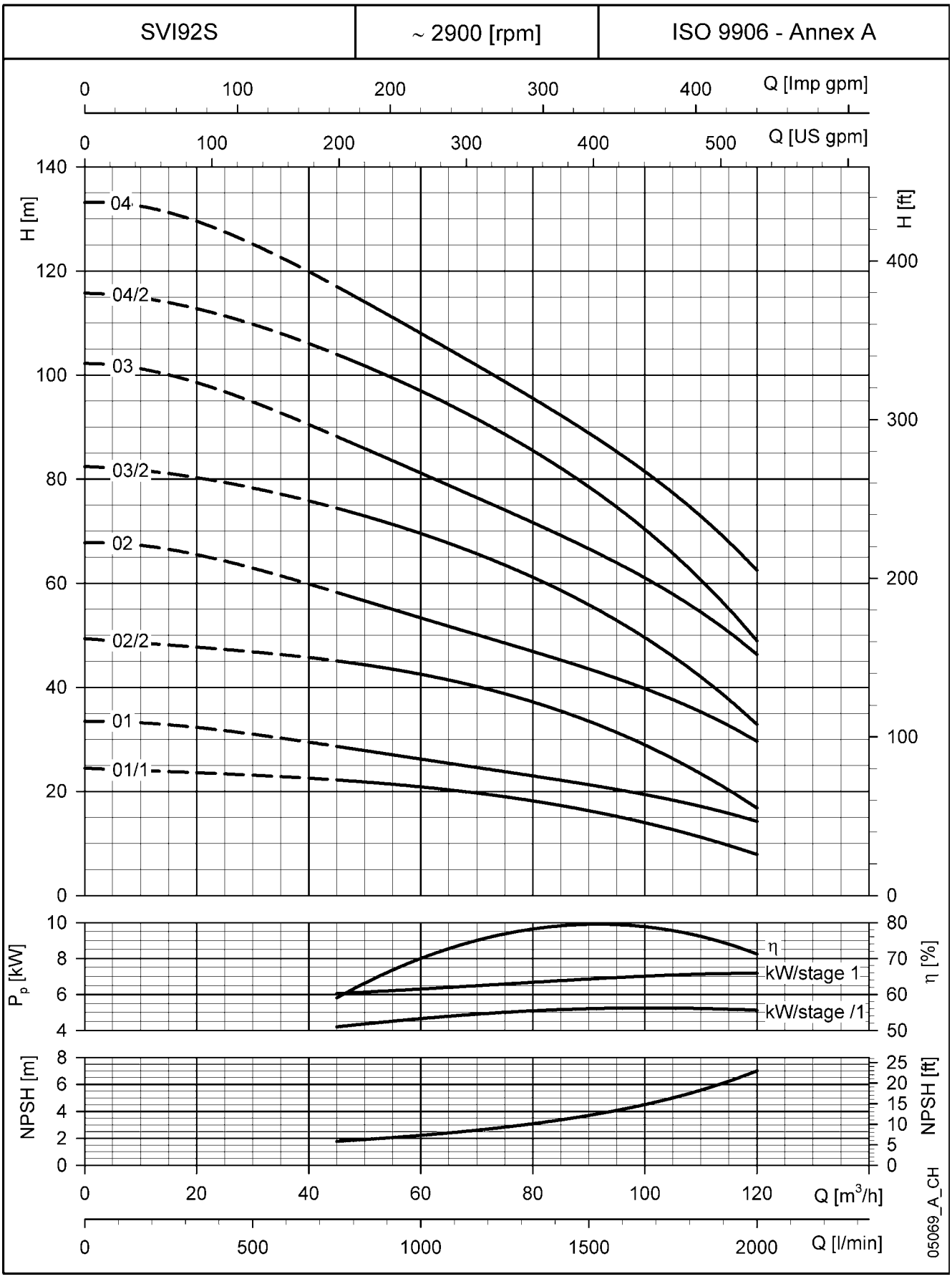

These performances are valid for liquids with density ρ = 1.0 Kg/dm³ and kinematic viscosity ν = 1 mm²/sec.

SVI 33, 46, 66, 92 SERIES (S, N VERSIONS)
DIMENSIONS OF ROUND THREADED COUNTERFLANGES

PUMP TYPE	DN	ø C	DIMENSIONS (mm) ø A	B	ø D	H	HOLES ø F	N°	PN
SVI33	80	Rp 3	160	17	200	27	18	8	16
SVI46									
SVI66									
SVI92									

svi-ctf-tonde-f-en_a_td

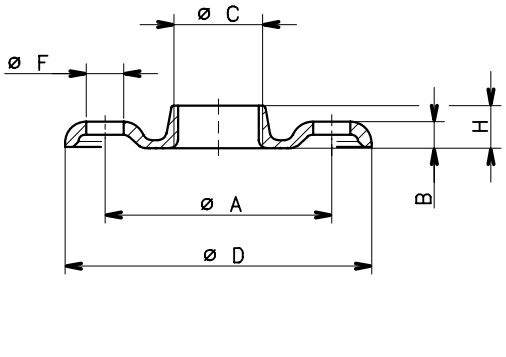

SVI 33, 46, 66, 92 SERIES (S, N VERSIONS)
DIMENSIONS PF ROUND WELD-ON COUNTERFLANGES

PUMP TYPE	DN	ø C	DIMENSIONS (mm) ø A	B	ø D	HOLES ø F	N°	PN
SVI33	80	90	160	20	200	18	8	16
SVI46								
SVI66								
SVI92								
SVI33	80	90	160	24	200	18	8	25
SVI46								
SVI66								
SVI92								

svi-ctf-tonde-s-en_a_td

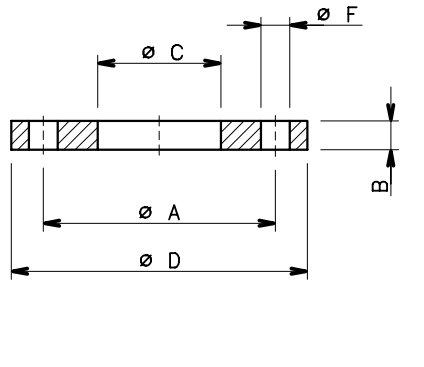

ROUND COUNTERFLANGES

- SVI 33, 46, 66, 92 S versions : Kit containing weld-on counterflange (PN16, PN25) or threaded one PN16 made of galvanized steel. Each Kit contains 1 counterflange plus bolts and gasket.

- SVI 33, 46, 66, 92 N versions : Kit containing weld-on counterflange (PN16, PN25) or threaded one PN16 made of AISI 316L stainless steel. Each Kit contains 1 counterflange plus bolts and gasket.

INSTALLATION

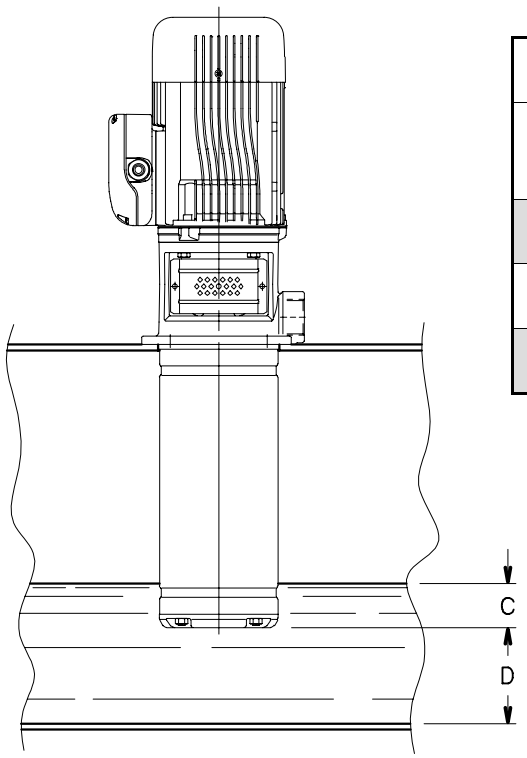

MINIMUM IMMERSION LEVEL		DISTANCE FROM THE BOTTOM D mm	
PUMP TYPE	DIMENSION C mm	MINIMUM	RECOMMENDED
SVI2 SVI4	25	20	60
SVI8 SVI16	25	35	80
SVI33-46 SVI66-92	80	60	120

svi-liv-liq-en_a_td

05005_A_SC

LOWARA
a xylem brand

TECHNICAL APPENDIX

NPSH

The minimum operating values that can be reached at the pump suction end are limited by the onset of cavitation.

Cavitation is the formation of vapour-filled cavities within liquids where the pressure is locally reduced to a critical value, or where the local pressure is equal to, or just below the vapour pressure of the liquid.

The vapour-filled cavities flow with the current and when they reach a higher pressure area the vapour contained in the cavities condenses. The cavities collide, generating pressure waves that are transmitted to the walls. These, being subjected to stress cycles, gradually become deformed and yield due to fatigue. This phenomenon, characterized by a metallic noise produced by the hammering on the pipe walls, is called incipient cavitation.

The damage caused by cavitation may be magnified by electrochemical corrosion and a local rise in temperature due to the plastic deformation of the walls. The materials that offer the highest resistance to heat and corrosion are alloy steels, especially austenitic steel. The conditions that trigger cavitation may be assessed by calculating the total net suction head, referred to in technical literature with the acronym NPSH (Net Positive Suction Head).

The NPSH represents the total energy (expressed in m.) of the liquid measured at suction under conditions of incipient cavitation, excluding the vapour pressure (expressed in m.) that the liquid has at the pump inlet.

To find the static height hz at which to install the machine under safe conditions, the following formula must be verified:

hp + hz ≥ (NPSHr + 0.5) + hf + hpv ①

where:

hp is the absolute pressure applied to the free liquid surface in the suction tank, expressed in m. of liquid; hp is the quotient between the barometric pressure and the specific weight of the liquid.

hz is the suction lift between the pump axis and the free liquid surface in the suction tank, expressed in m.; hz is negative when the liquid level is lower than the pump axis.

hf is the flow resistance in the suction line and its accessories, such as: fittings, foot valve, gate valve, elbows, etc.

hpv is the vapour pressure of the liquid at the operating temperature, expressed in m. of liquid. hpv is the quotient between the Pv vapour pressure and the liquid's specific weight.

0,5 is the safety factor.

The maximum possible suction head for installation depends on the value of the atmospheric pressure (i.e. the elevation above sea level at which the pump is installed) and the temperature of the liquid.

To help the user, with reference to water temperature (4° C) and to the elevation above sea level, the following tables show the drop in hydraulic pressure head in relation to the elevation above sea level, and the suction loss in relation to temperature.

Water temperature (°C)	20	40	60	80	90	110	120
Suction loss (m)	0,2	0,7	2,0	5,0	7,4	15,4	21,5

Elevation above sea level (m)	500	1000	1500	2000	2500	3000
Suction loss (m)	0,55	1,1	1,65	2,2	2,75	3,3

Friction loss is shown in the tables at pages 50-51 of this catalogue. To reduce it to a minimum, especially in cases of high suction head (over 4-5 m.) or within the operating limits with high flow rates, we recommend using a suction line having a larger diameter than that of the pump's suction port.
It is always a good idea to position the pump as close as possible to the liquid to be pumped.

Make the following calculation:

Liquid: water at ~15°C $\gamma = 1$ kg/dm³
Flow rate required: 30 m³/h
Head for required delivery: 43 m.
Suction lift: 3,5 m.
The selection is an FHE 40-200/75 pump whose NPSH required value is, at 30 m³/h, di 2,5 m.

For water at 15 °C

hp = Pa / γ = 10,33m, hpv = Pv / γ = 0,174m (0,01701 bar)

The Hf flow resistance in the suction line with foot valves is ~ 1,2 m.
By substituting the parameters in formula ① with the numeric values above, we have:

10,33 + (-3,5) ≥ (2,5 + 0,5) + 1,2 + 0,17

from which we have: 6,8 > 4,4

The relation is therefore verified.

TECHNICAL APPENDIX VAPOUR PRESSURE PS VAPOUR PRESSURE AND ρ DENSITY OF WATER TABLE

t	T	ps	ρ
°C	K	bar	kg/dm^3
0	273,15	0,00611	0,9998
1	274,15	0,00657	0,9999
2	275,15	0,00706	0,9999
3	276,15	0,00758	0,9999
4	277,15	0,00813	1,0000
5	278,15	0,00872	1,0000
6	279,15	0,00935	1,0000
7	280,15	0,01001	0,9999
8	281,15	0,01072	0,9999
9	282,15	0,01147	0,9998
10	283,15	0,01227	0,9997
11	284,15	0,01312	0,9997
12	285,15	0,01401	0,9996
13	286,15	0,01497	0,9994
14	287,15	0,01597	0,9993
15	288,15	0,01704	0,9992
16	289,15	0,01817	0,9990
17	290,15	0,01936	0,9988
18	291,15	0,02062	0,9987
19	292,15	0,02196	0,9985
20	293,15	0,02337	0,9983
21	294,15	0,24850	0,9981
22	295,15	0,02642	0,9978
23	296,15	0,02808	0,9976
24	297,15	0,02982	0,9974
25	298,15	0,03166	0,9971
26	299,15	0,03360	0,9968
27	300,15	0,03564	0,9966
28	301,15	0,03778	0,9963
29	302,15	0,04004	0,9960
30	303,15	0,04241	0,9957
31	304,15	0,04491	0,9954
32	305,15	0,04753	0,9951
33	306,15	0,05029	0,9947
34	307,15	0,05318	0,9944
35	308,15	0,05622	0,9940
36	309,15	0,05940	0,9937
37	310,15	0,06274	0,9933
38	311,15	0,06624	0,9930
39	312,15	0,06991	0,9927
40	313,15	0,07375	0,9923
41	314,15	0,07777	0,9919
42	315,15	0,08198	0,9915
43	316,15	0,09639	0,9911
44	317,15	0,09100	0,9907
45	318,15	0,09582	0,9902
46	319,15	0,10086	0,9898
47	320,15	0,10612	0,9894
48	321,15	0,11162	0,9889
49	322,15	0,11736	0,9884
50	323,15	0,12335	0,9880
51	324,15	0,12961	0,9876
52	325,15	0,13613	0,9871
53	326,15	0,14293	0,9862
54	327,15	0,15002	0,9862

t	T	ps	ρ
°C	K	bar	kg/dm^3
55	328,15	0,15741	0,9857
56	329,15	0,16511	0,9852
57	330,15	0,17313	0,9846
58	331,15	0,18147	0,9842
59	332,15	0,19016	0,9837
60	333,15	0,1992	0,9832
61	334,15	0,2086	0,9826
62	335,15	0,2184	0,9821
63	336,15	0,2286	0,9816
64	337,15	0,2391	0,9811
65	338,15	0,2501	0,9805
66	339,15	0,2615	0,9799
67	340,15	0,2733	0,9793
68	341,15	0,2856	0,9788
69	342,15	0,2984	0,9782
70	343,15	0,3116	0,9777
71	344,15	0,3253	0,9770
72	345,15	0,3396	0,9765
73	346,15	0,3543	0,9760
74	347,15	0,3696	0,9753
75	348,15	0,3855	0,9748
76	349,15	0,4019	0,9741
77	350,15	0,4189	0,9735
78	351,15	0,4365	0,9729
79	352,15	0,4547	0,9723
80	353,15	0,4736	0,9716
81	354,15	0,4931	0,9710
82	355,15	0,5133	0,9704
83	356,15	0,5342	0,9697
84	357,15	0,5557	0,9691
85	358,15	0,5780	0,9684
86	359,15	0,6011	0,9678
87	360,15	0,6249	0,9671
88	361,15	0,6495	0,9665
89	362,15	0,6749	0,9658
90	363,15	0,7011	0,9652
91	364,15	0,7281	0,9644
92	365,15	0,7561	0,9638
93	366,15	0,7849	0,9630
94	367,15	0,8146	0,9624
95	368,15	0,8453	0,9616
96	369,15	0,8769	0,9610
97	370,15	0,9094	0,9602
98	371,15	0,9430	0,9596
99	372,15	0,9776	0,9586
100	373,15	1,0133	0,9581
102	375,15	1,0878	0,9567
104	377,15	1,1668	0,9552
106	379,15	1,2504	0,9537
108	381,15	1,3390	0,9522
110	383,15	1,4327	0,9507
112	385,15	1,5316	0,9491
114	387,15	1,6362	0,9476
116	389,15	1,7465	0,9460
118	391,15	1,8628	0,9445

t	T	ps	ρ
°C	K	bar	kg/dm^3
120	393,15	1,9854	0,9429
122	395,15	2,1145	0,9412
124	397,15	2,2504	0,9396
126	399,15	2,3933	0,9379
128	401,15	2,5435	0,9362
130	403,15	2,7013	0,9346
132	405,15	2,867	0,9328
134	407,15	3,041	0,9311
136	409,15	3,223	0,9294
138	411,15	3,414	0,9276
140	413,15	3,614	0,9258
145	418,15	4,155	0,9214
155	428,15	5,433	0,9121
160	433,15	6,181	0,9073
165	438,15	7,008	0,9024
170	433,15	7,920	0,8973
175	448,15	8,924	0,8921
180	453,15	10,027	0,8869
185	458,15	11,233	0,8815
190	463,15	12,551	0,8760
195	468,15	13,987	0,8704
200	473,15	15,550	0,8647
205	478,15	17,243	0,8588
210	483,15	19,077	0,8528
215	488,15	21,060	0,8467
220	493,15	23,198	0,8403
225	498,15	25,501	0,8339
230	503,15	27,976	0,8273
235	508,15	30,632	0,8205
240	513,15	33,478	0,8136
245	518,15	36,523	0,8065
250	523,15	39,776	0,7992
255	528,15	43,246	0,7916
260	533,15	46,943	0,7839
265	538,15	50,877	0,7759
270	543,15	55,058	0,7678
275	548,15	59,496	0,7593
280	553,15	64,202	0,7505
285	558,15	69,186	0,7415
290	563,15	74,461	0,7321
295	568,15	80,037	0,7223
300	573,15	85,927	0,7122
305	578,15	92,144	0,7017
310	583,15	98,70	0,6906
315	588,15	105,61	0,6791
320	593,15	112,89	0,6669
325	598,15	120,56	0,6541
330	603,15	128,63	0,6404
340	613,15	146,05	0,6102
350	623,15	165,35	0,5743
360	633,15	186,75	0,5275
370	643,15	210,54	0,4518
374,15	647,30	221,20	0,3154

G-at_npsh_a_sc

LOWARA
a xylem brand

TABLE OF FLOW RESISTANCE IN 100 m OF STRAIGHT CAST IRON PIPELINE (HAZEN-WILLIAMS FORMULA C=100)

FLOW RATE			NOMINAL DIAMETER in mm and INCHES																
m^3/h	l/min		15	20	25	32	40	50	65	80	100	125	150	175	200	250	300	350	400
			1/2"	3/4"	1"	1 1/4"	1 1/2"	2	2 1/2"	3"	4"	5"	6"	7"	8"	10"	12"	14"	16"
0,6	10	v	0,94	0,53	0,34	0,21	0,13												
		hr	16	3,94	1,33	0,40	0,13												
0,9	15	v	1,42	0,80	0,51	0,31	0,20												
		hr	33,9	8,35	2,82	0,85	0,29												
1,2	20	v	1,89	1,06	0,68	0,41	0,27	0,17											
		hr	57,7	14,21	4,79	1,44	0,49	0,16											
1,5	25	v	2,36	1,33	0,85	0,52	0,33	0,21											
		hr	87,2	21,5	7,24	2,18	0,73	0,25											
1,8	30	v	2,83	1,59	1,02	0,62	0,40	0,25											
		hr	122	30,1	10,1	3,05	1,03	0,35											
2,1	35	v	3,30	1,86	1,19	0,73	0,46	0,30											
		hr	162	40,0	13,5	4,06	1,37	0,46											
2,4	40	v		2,12	1,36	0,83	0,53	0,34	0,20										
		hr		51,2	17,3	5,19	1,75	0,59	0,16										
3	50	v		2,65	1,70	1,04	0,66	0,42	0,25										
		hr		77,4	26,1	7,85	2,65	0,89	0,25										
3,6	60	v		3,18	2,04	1,24	0,80	0,51	0,30										
		hr		108	36,6	11,0	3,71	1,25	0,35										
4,2	70	v		3,72	2,38	1,45	0,93	0,59	0,35										
		hr		144	48,7	14,6	4,93	1,66	0,46										
4,8	80	v		4,25	2,72	1,66	1,06	0,68	0,40										
		hr		185	62,3	18,7	6,32	2,13	0,59										
5,4	90	v			3,06	1,87	1,19	0,76	0,45	0,30									
		hr			77,5	23,3	7,85	2,65	0,74	0,27									
6	100	v			3,40	2,07	1,33	0,85	0,50	0,33									
		hr			94,1	28,3	9,54	3,22	0,90	0,33									
7,5	125	v			4,25	2,59	1,66	1,06	0,63	0,41									
		hr			142	42,8	14,4	4,86	1,36	0,49									
9	150	v				3,11	1,99	1,27	0,75	0,50	0,32								
		hr				59,9	20,2	6,82	1,90	0,69	0,23								
10,5	175	v				3,63	2,32	1,49	0,88	0,58	0,37								
		hr				79,7	26,9	9,07	2,53	0,92	0,31								
12	200	v				4,15	2,65	1,70	1,01	0,66	0,42								
		hr				102	34,4	11,6	3,23	1,18	0,40								
15	250	v				5,18	3,32	2,12	1,26	0,83	0,53	0,34							
		hr				154	52,0	17,5	4,89	1,78	0,60	0,20							
18	300	v					3,98	2,55	1,51	1,00	0,64	0,41							
		hr					72,8	24,6	6,85	2,49	0,84	0,28							
24	400	v					5,31	3,40	2,01	1,33	0,85	0,54	0,38						
		hr					124	41,8	11,66	4,24	1,43	0,48	0,20						
30	500	v					6,63	4,25	2,51	1,66	1,06	0,68	0,47						
		hr					187	63,2	17,6	6,41	2,16	0,73	0,30						
36	600	v						5,10	3,02	1,99	1,27	0,82	0,57	0,42					
		hr						88,6	24,7	8,98	3,03	1,02	0,42	0,20					
42	700	v						5,94	3,52	2,32	1,49	0,95	0,66	0,49					
		hr						118	32,8	11,9	4,03	1,36	0,56	0,26					
48	800	v						6,79	4,02	2,65	1,70	1,09	0,75	0,55					
		hr						151	42,0	15,3	5,16	1,74	0,72	0,34					
54	900	v						7,64	4,52	2,99	1,91	1,22	0,85	0,62					
		hr						188	52,3	19,0	6,41	2,16	0,89	0,42					
60	1000	v							5,03	3,32	2,12	1,36	0,94	0,69	0,53				
		hr							63,5	23,1	7,79	2,63	1,08	0,51	0,27				
75	1250	v							6,28	4,15	2,65	1,70	1,18	0,87	0,66				
		hr							96,0	34,9	11,8	3,97	1,63	0,77	0,40				
90	1500	v							7,54	4,98	3,18	2,04	1,42	1,04	0,80				
		hr							134	48,9	16,5	5,57	2,29	1,08	0,56				
105	1750	v							8,79	5,81	3,72	2,38	1,65	1,21	0,93				
		hr							179	65,1	21,9	7,40	3,05	1,44	0,75				
120	2000	v								6,63	4,25	2,72	1,89	1,39	1,06	0,68			
		hr								83,3	28,1	9,48	3,90	1,84	0,96	0,32			
150	2500	v								8,29	5,31	3,40	2,36	1,73	1,33	0,85			
		hr								126	42,5	14,3	5,89	2,78	1,45	0,49			
180	3000	v									6,37	4,08	2,83	2,08	1,59	1,02	0,71		
		hr									59,5	20,1	8,26	3,90	2,03	0,69	0,28		
210	3500	v									7,43	4,76	3,30	2,43	1,86	1,19	0,83		
		hr									79,1	26,7	11,0	5,18	2,71	0,91	0,38		
240	4000	v									8,49	5,44	3,77	2,77	2,12	1,36	0,94		
		hr									101	34,2	14,1	6,64	3,46	1,17	0,48		
300	5000	v										6,79	4,72	3,47	2,65	1,70	1,18		
		hr										51,6	21,2	10,0	5,23	1,77	0,73		
360	6000	v										8,15	5,66	4,16	3,18	2,04	1,42		
		hr										72,3	29,8	14,1	7,33	2,47	1,02		
420	7000	v											6,61	4,85	3,72	2,38	1,65	1,21	
		hr											39,6	18,7	9,75	3,29	1,35	0,64	
480	8000	v											7,55	5,55	4,25	2,72	1,89	1,39	
		hr											50,7	23,9	12,49	4,21	1,73	0,82	
540	9000	v											8,49	6,24	4,78	3,06	2,12	1,56	1,19
		hr											63,0	29,8	15,5	5,24	2,16	1,02	0,53
600	10000	v												6,93	5,31	3,40	2,36	1,73	1,33
		hr												36,2	18,9	6,36	2,62	1,24	0,65

The hr values must be multiplied by:
0.71 for galvanized or painted steel pipes
0.54 for stainless steel or copper pipes
0.47 for PVC or PE pipes

G-at-pct_a_th

hr = flow resistance for 100m of straight pipeline (m)
V = water speed (m/s)

FLOW RESISTANCE

TABLE OF FLOW RESISTANCE IN BENDS, VALVES AND GATES

The flow resistance is calculated using the equivalent pipeline length method according to the table below:

ACCESSORY TYPE	DN											
	25	32	40	50	65	80	100	125	150	200	250	300
	Equivalent pipeline length (m)											
45° bend	0,2	0,2	0,4	0,4	0,6	0,6	0,9	1,1	1,5	1,9	2,4	2,8
90° bend	0,4	0,6	0,9	1,1	1,3	1,5	2,1	2,6	3,0	3,9	4,7	5,8
90° smooth bend	0,4	0,4	0,4	0,6	0,9	1,1	1,3	1,7	1,9	2,8	3,4	3,9
Union tee or cross	1,1	1,3	1,7	2,1	2,6	3,2	4,3	5,3	6,4	7,5	10,7	12,8
Gate	-	-	-	0,2	0,2	0,2	0,4	0,4	0,6	0,9	1,1	1,3
Non return valve	1,1	1,5	1,9	2,4	3,0	3,4	4,7	5,9	7,4	9,6	11,8	13,9

G-a-pcv_a_th

The table is valid for the Hazen Williams coefficient C = 100 (cast iron pipework). For steel pipework, multiply the values by 1.41. For stainless steel, copper and coated cast iron pipework, multiply the values by 1.85.
When the **equivalent pipeline length** has been determined, the flow resistance is obtained from the table of flow resistance.
The values given are guideline values which are bound to vary slightly according to the model, especially for gate valves and non-return valves, for which it is a good idea to check the values supplied by the manufacturers.

VOLUMETRIC CAPACITY

Litres per minute l/min	Cubic metres per hour m^3/h	Cubic feet per hour ft^3/h	Cubic feet per minute ft^3/min	Imp. gal. per minute Imp. gal/min	US gal. per minute Us gal./min
1,0000	0,0600	2,1189	0,0353	0,2200	**0,2642**
16,6667	**1,0000**	35,3147	0,5886	3,6662	4,4029
0,4719	0,0283	**1,0000**	0,0167	0,1038	**0,1247**
28,3168	1,6990	60,0000	**1,0000**	6,2288	7,4805
4,5461	0,2728	9,6326	0,1605	**1,0000**	1,2009
3,7854	0,2271	8,0208	0,1337	0,8327	**1,0000**

PRESSURE AND HEAD

Newton per square metre N/m^2	kilo Pascal kPa	bar bar	Pound force per square inch psi	metre of water m H_2O	millimetre of mercury mm Hg
1,0000	0,0010	1×10^{-5}	1.45×10^{-4}	1.02×10^{-4}	**0,0075**
1000,0000	**1,0000**	0,0100	0,1450	0,1020	7,5006
1×10^5	100,0000	**1,0000**	14,5038	10,1972	**750,0638**
6894,7570	6,8948	0,0689	**1,0000**	0,7031	**51,7151**
9806,6500	9,8067	0,0981	1,4223	**1,0000**	**73,5561**
133,3220	0,1333	0,0013	0,0193	0,0136	**1,0000**

LENGTH

millimetre mm	centimetre cm	metre m	inch in	foot ft	yard yd
1,0000	0,1000	0,0010	0,0394	0,0033	**0,0011**
10,0000	**1,0000**	0,0100	0,3937	0,0328	0,0109
1000,0000	100,0000	**1,0000**	39,3701	3,2808	**1,0936**
25,4000	2,5400	0,0254	**1,0000**	0,0833	0,0278
304,8000	30,4800	0,3048	12,0000	**1,0000**	**0,3333**
914,4000	91,4400	0,9144	36,0000	3,0000	**1,0000**

VOLUME

cubic metre m^3	litre litro	millilitre ml	imp. Gallon imp. gal.	US gallon US gal.	cubic foot ft^3
1,0000	1000,0000	1×10^6	219,9694	264,1720	**35,3147**
0,0010	**1,0000**	1000,0000	0,2200	0,2642	0,0353
1×10^{-6}	0,0010	**1,0000**	2.2×10^{-4}	2.642×10^{-4}	3.53×10^{-5}
0,0045	4,5461	4546,0870	**1,0000**	1,2009	0,1605
0,0038	3,7854	3785,4120	0,8327	**1,0000**	**0,1337**
0,0283	28,3168	28316,8466	6,2288	7,4805	**1,0000**

G-at_pp-en_a_sc

FURTHER PRODUCT SELECTION AND DOCUMENTATION

Xylect

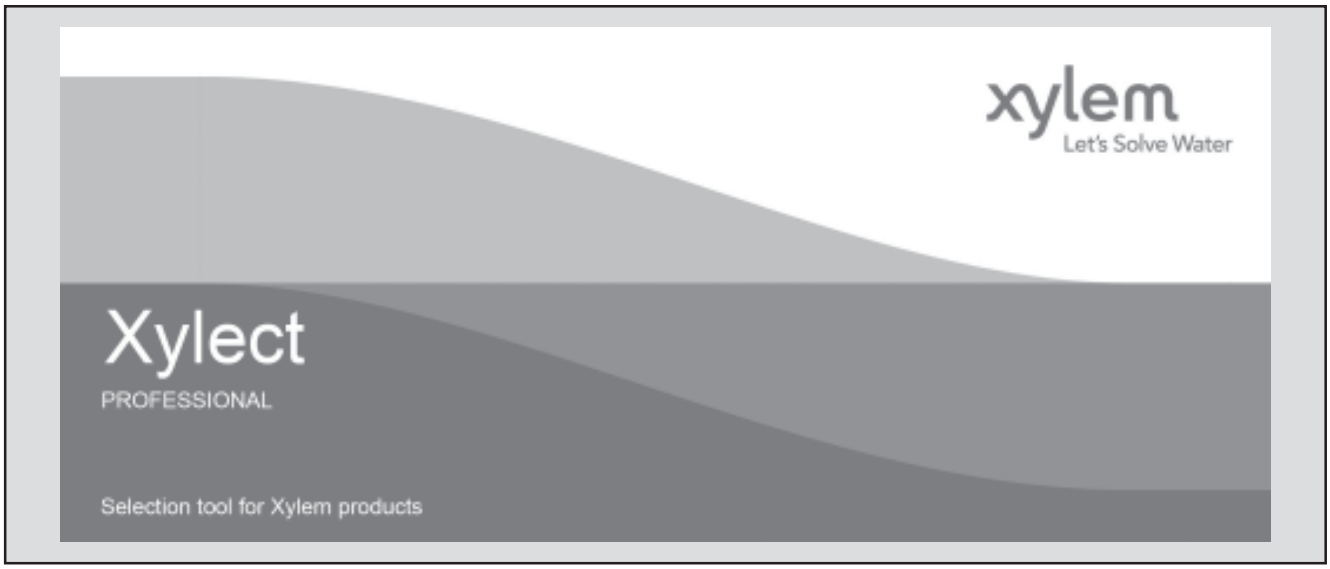

Xylect is pump solution selection software with an extensive online database of product information across the entire Lowara, and Vogel range of pumps and related products, with multiple search options and helpful project management facilities. The system holds up-to-date product information on thousands of products and accessories.

The possibility to search by applications and the detailed information output given makes it easy to make the optimal selection without having detailed knowledge about the Lowara and Vogel products.

The search can be made by:

- Application
- Product type
- Duty point

Xylect gives a detailed output:

- List with search results
- Performance curves (flow, head, power, efficiency, NPSH)
- Motor data
- Dimensional drawings
- Options
- Data sheet printouts
- Document downloads incl dxf files

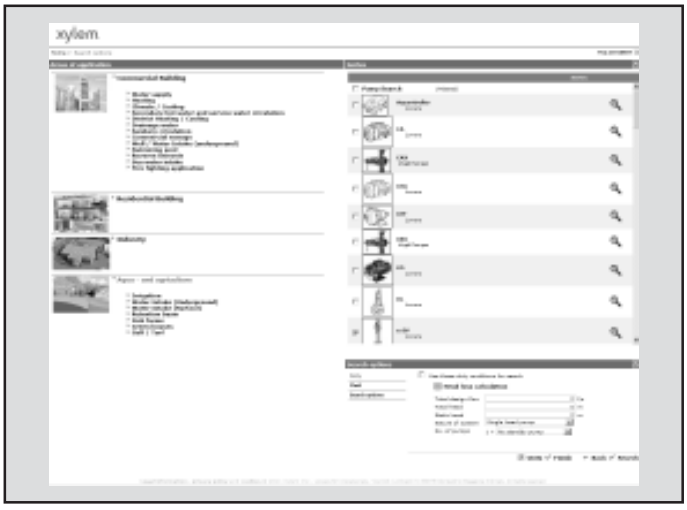

The search by application guides users not familiar with the product range to the right choice.

FURTHER PRODUCT SELECTION AND DOCUMENTATION

Xylect

The detailed output makes it easy to select the optimal pump from the given alternatives.

The best way to work with Xylect is to create a personal account. This makes it possible to:

- Set own standard units
- Create and save projects
- Share projects with other Xylect users

Every user have a My Xylect space, where all projects are saved.

For more information about Xylect please contact our sales network or visit www.xylect.com.

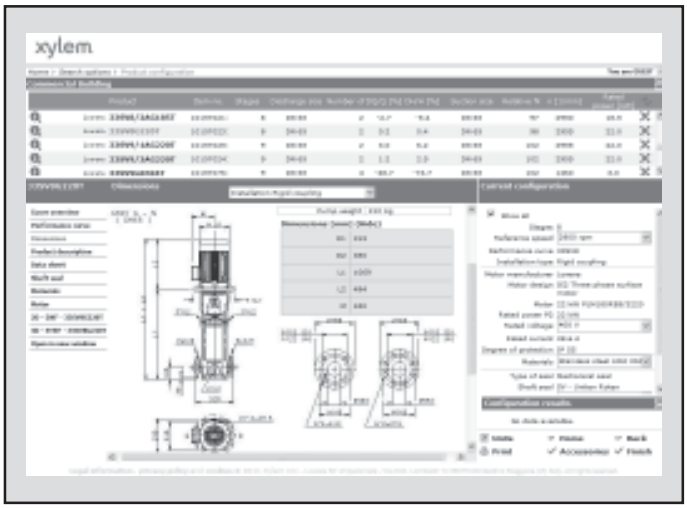

Dimensional drawings appear on the screen and can be downloaded in dxf format.

Xylem |'zīləm|

1) The tissue in plants that brings water upward from the roots;
2) a leading global water technology company.

We're 12,000 people unified in a common purpose: creating innovative solutions to meet our world's water needs. Developing new technologies that will improve the way water is used, conserved, and re-used in the future is central to our work. We move, treat, analyze, and return water to the environment, and we help people use water efficiently, in their homes, buildings, factories and farms. In more than 150 countries, we have strong, long-standing relationships with customers who know us for our powerful combination of leading product brands and applications expertise, backed by a legacy of innovation.

For more information on how Xylem can help you, go to xyleminc.com.

LOWARA
a xylem brand

СтройЗаказ
ТЕЛ: (8172) 51-07-67
+7 (900) 541-71-79
+7 (921) 534-59-05
E-mail:
uiv-water2012@ya.ru
Сайт: stroyzakaz35.ru